FILTRE RETOUR SEMI PLONGE
RETURN-LINE FILTER
FILTRO DE RETORNO EN LINEA

FIO

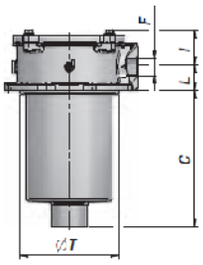

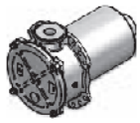

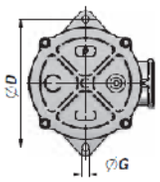

FIO 30-100

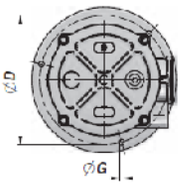

FIO 180

Code Code Código	Type Type Tipo	l/min	F BSP	Micron	ØT	C	L	I	ØD	ØG	kg
AFIO030030	FIO 30/3-P	20	1/2""	30	67	78	22	30	90	6,4"	0,50
AFIO030060	FIO 30/6-P	30	"	60	"	"	"	"	"	"	0,50
AFIO030000	FIO 30/9-P	30	1/2""	90	"	"	"	"	"	8,4"	0,50
AFIO050030	FIO 50/3-P	35	"	30	90"	100"	28"	43"	115"	"	0,80
AFIO050060	FIO 50/6-P	50	3/4""	60	"	"	"	"	"	8,4'	0,80
AFIO050000	FIO 50/9-P	50	"	90	90"	150"	28"	43"	115"	"	0,80
AFIO080030	FIO 80/3-P	55	1""	30	"	"	"	"	"	8,4'	0,90
AFIO080060	FIO 80/6-P	80	"	60	90"	150"	28"	43"	115"	"	0,90
AFIO080000	FIO 80/9-P	80	1"1/4"	90	"	"	"	"	"	10,5"	0,90
AFIO100030	FIO 100/3-P	65	"	30	130"	230"	35"	53"	175"	"	0,90
AFIO100060	FIO 100/6-P	100		60	"	"	"	"	"		0,90
AFIO100000	FIO 100/9-P	100		90							0,90
AFIO180030	FIO 180/3-P	100		30							2,50
AFIO180060	FIO 180/6-P	150		60							2,50
AFIO180000	FIO 180/9-P	150		90							2,50

CARTOUCHE
ELEMENT
CARTUCHO

CR

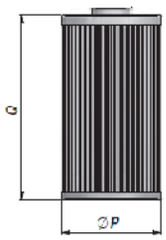

Code Code Código	Type Type Tipo	ØP	Q	kg
AFCR030030	CR 30/3	52	67	0,13
AFCR030060	CR 30/6	"	"	0,12
AFCR030000	CR 30/9	"	"	0,14
AFCR050030	CR 50/3	70"	75"	0,21
AFCR050060	CR 50/6	"	"	0,22
AFCR050000	CR 50/9	70"	128"	0,22
AFCR100030	CR 100/3	"	"	0,30
AFCR100060	CR 100/6	70"	128"	0,27
AFCR100000	CR 100/9	"	"	0,33
AFCR100030	CR 100/3	95"	203"	0,30
AFCR100060	CR 100/6	"	"	0,27
AFCR100000	CR 100/9			0,33
AFCR180030	CR 180/3			0,70
AFCR180060	CR 180/6			0,57
AFCR180000	CR 180/9			0,76

TANK MOUNTED RETURN LINE FILTERS SERIES HF 502

Replaces: HF 502 01 T E

The tank mounted filters HF 502 series are specifically designed to be directly connected on the hydraulic circuits return line and provide versatility to safeguard the circuit components from contaminating particles.

ADJUSTABLE SETTING BY-PASS VALVE - REMOVABLE AND REUSABLE

MINIMUM EXTENSION FROM THE TANK

INTERCHANGEABLE WITH HF 550 AND HF 554 SERIES

COMPLETE FILTER		
MATERIALS	Cover	Aluminum
	Housing	Aluminum
	Bowl	Reinforced nylon - Steel
	Seals	Buna - Viton
FLUID COMPATIBILITY CONFORMING TO ISO 2943	With reference to ISO 6743/4	With fluid (HH-HL-HM-HR-HV-HG), and water emulsion (HFAE-HFAS) use filters with Buna seals. With water - glycol (HFC) ask for anodizing treatment.
		With synthetic fluid (HS-HFDR-HFDU-HFDS) use filters with Viton seals.
FLOW RANGE	min.	20 [l/min]
	max.	600 [l/min]
WORKING PRESSURE	max.	800 [kPa] 8 bar
TESTING PRESSURE		1200 [kPa] 12 bar
BURST PRESSURE		1600 [kPa] 16 bar
OPERATING TEMPERATURE	With Buna seals	- 20 + 80 [°C]
	With Viton seals	- 20 + 110 [°C]
FILTER ELEMENTS		
MATERIALS	End cap - Inner tube	Zinc plated steel
	Filter media	Steel
		Phosphor bronze
		Cellulose - Reinforced cellulose
		Micro-fibre glass
REMOVAL RATING		Conforming to ISO 16889
ELEMENT COLLAPSE PRESSURE RATING	Conforming to ISO 2941	1000 [kPa] 10 bar

Edition: 02/10.2001

TECHNICAL DATA

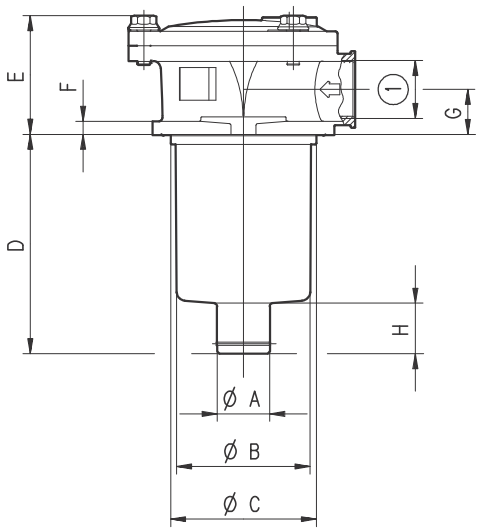

TANK MOUNTING HOLE DIMENSIONS

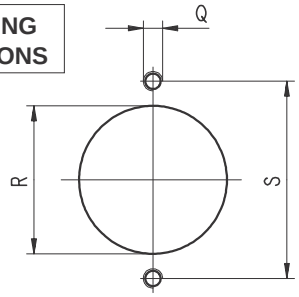

Filter type	Q	R	S
		mm	mm
HF 502-10.060	M 6	67,5	89 [1]
HF 502-10.129			
HF 502-20.077	M 8	88,5	115 [1]
HF 502-20.122			
HF 502-20.201			

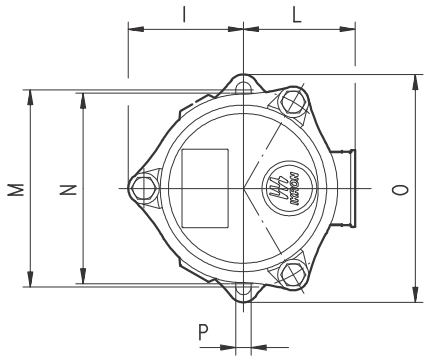

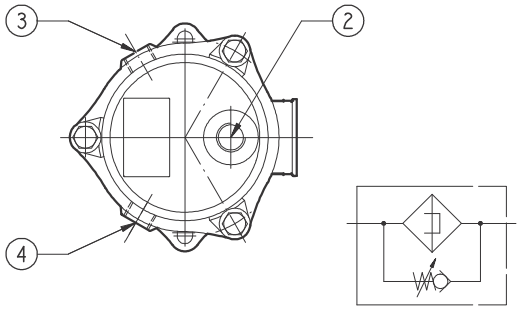

DI14-D01/1001

PRESSURE/VACUUM GAUGE

M
N

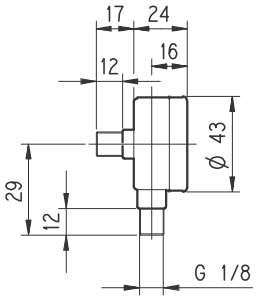

VISUAL INDICATOR

P

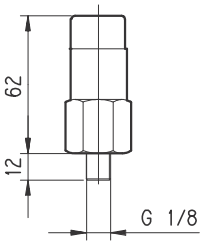

ELECTRICAL INDICATOR

S

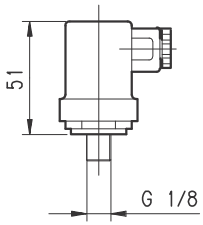

DI14-D02/0501

Filter type	Ø A	Ø B	Ø C	D	E	F	G	H	I	L	M	N	O	P
	mm	mm	mm	mm	mm	mm	mm	mm	mm	mm	mm	mm	mm	mm
HF 502-10.060	24	62	66,5	83	54,5	8	20,5	22	52,6	51	90	88	104	7
HF 502-10.129				152,2										
HF 502-20.077	27,4	80	87,5	106,5	73	11	28,5	27	67	67	116	114	135	8,5
HF 502-20.122				151,5										
HF 502-20.201	40			232,5				29						

Filter type	(GAS - BSPP)		(GAS - BSPP) Indicators		Filler cap
	Standard ( )	On request ( )	Standard	On request	
HF 502-10.060	G 1/2	G 3/8 - G 3/4	G 1/8	G 1/4	Not available
HF 502-10.129	G 3/4	G 3/8 - G 1/2			
HF 502-20.077	G 3/4	G 1/2	G1/8	G 1/4	G 1/2
HF 502-20.122	G 1	G 3/4			
HF 502-20.201					

( ) NPT, metric and SAE UN-UNF threads are available (consult our technical department).

Replaces: 01/10.99

Di14-002 - 02/10.01

TECHNICAL DATA

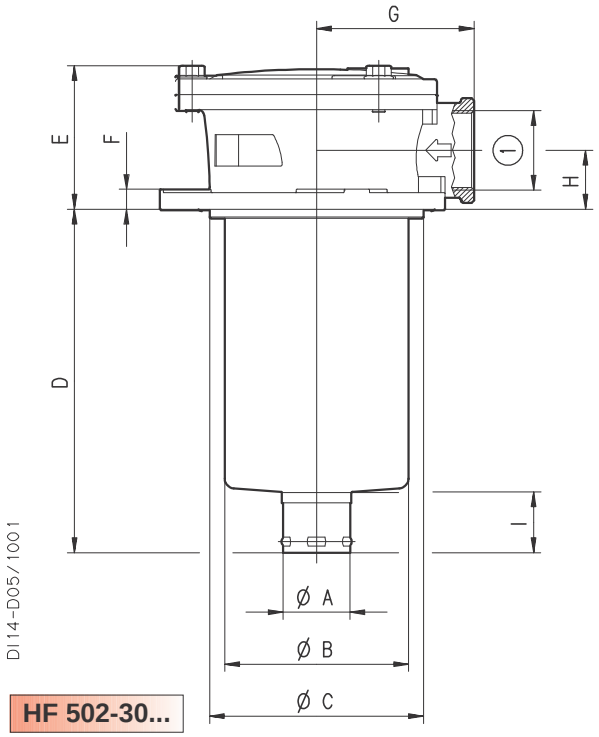

HF 502-30...

TANK MOUNTING HOLE DIMENSIONS

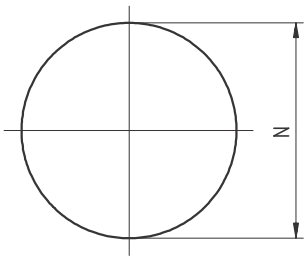

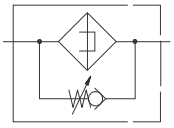

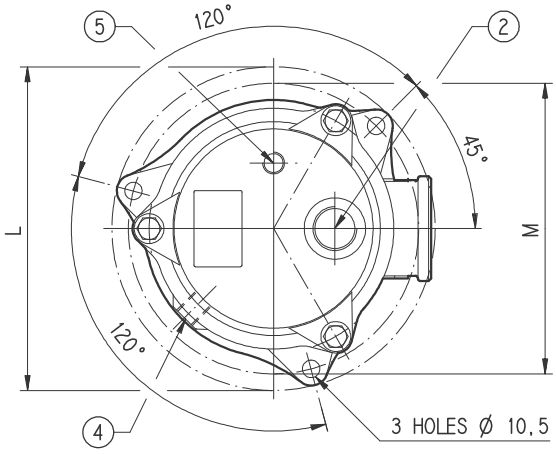

HF 502-40...

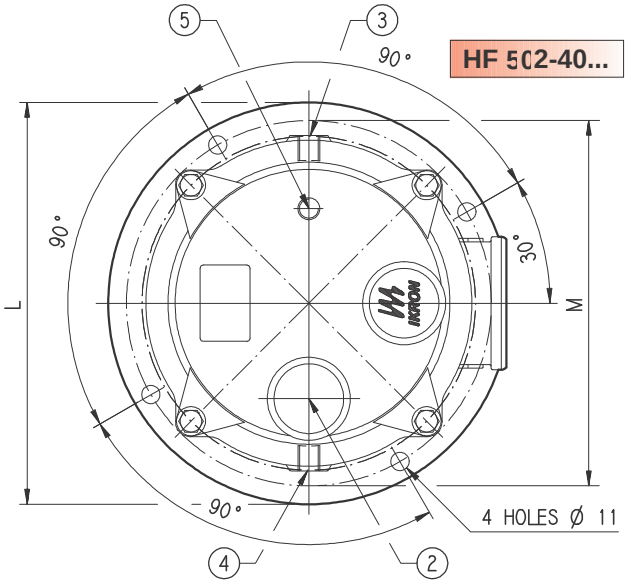

Filter type	Ø A	Ø B	Ø C	D	E	F	G	H	I	L	M	Ø N
	mm	mm	mm	mm	mm	mm	mm	mm	mm	mm	mm	mm
HF 502-30.162	40,5	111	129	229,5	86,5	12	95	35,5	36,5	195	175	130
HF 502-30.195												
HF 502-30.239				273,5								
HF 502-40.122	50	151	174	171	108	11,5	119	41	44,5	242	220	175
HF 502-40.162	64			238								
HF 502-40.194	50											
HF 502-40.195	64											
HF 502-40.239				298								

Filter type	(GAS - BSPP)		(GAS - BSPP) Indicators		Filler cap
	Standard ( )	On request ( )	Standard	On request	
HF 502-30.162	G 1 1/4	G 1 - G 1 1/2	G 1/8	G 1/4	G 3/4
HF 502-30.195					
HF 502-30.239	G 1 1/2	G 1 - G 1 1/4			
HF 502-40.122	G 1 1/2	G 2	G 1/8	G 1/4	G 1 1/4
HF 502-40.162					
HF 502-40.194					
HF 502-40.195					
HF 502-40.239	G 2	G 1 1/2			

( ) NPT, metric and SAE UN-UNF threads are available (consult our technical department).

HOW TO ORDER A COMPLETE FILTER

1	2	3	4	5	6	7
HF502-10.060	- AS	- FB060	- B17	- GC	- B	H

8	9	10	11
Z	- XD	- GA	- N

1	Filter type	CODE
See table page 2 and 3		HF502-...
2	**Filtering surface**	**CODE**
Standard		AS
3	**Degree of filtration**	**CODE**
3 [m] Micro-fibre glass		FG003
6 [m] Micro-fibre glass		FG006
10 [m] Micro-fibre glass		FG010
25 [m] Micro-fibre glass		FG025
60 m] Phosphor bronze		FB060
125 [m] Phosphor bronze		FB125
90 [m] Steel wire mesh		MS090
10 [m] Cellulose		SP010
25 [m] Cellulose		SP025
10 [m] Reinforced cellulose		RP010
25 [m] Reinforced cellulose		RP025
4	**By-pass valve**	**CODE**
Setting 170 [kPa]; 1,7 [bar]		B17
Setting 210 [kPa]; 2,1 [bar]		B21
Setting 350 [kPa]; 3,5 [bar]		B35

5	Inlet port	CODE
Thread GAS (BSPP)		
G 3/8		GC
G 1/2		GD
G 3/4		GE
G 1		GF
G 1 1/4		GG
G 1 1/2		GH
G 2		GL
6	**Seals**	**CODE**
Buna		B
Viton		V
7	**Filler cap**	**CODE**
None		H
With filler cap		L
8	**Magnetic set**	**CODE**
None		Z
With magnetic set		R

Only for HF 502-20 and HF 502-40

Only for HF 502-30 and HF 502-40

9	Indicators arrang.	CODE
None		XN
On the cover ( )		XD
On the housing-right side		XA
On the housing-left side		XB
10	**Dim. indicat. ports**	**CODE**
Thread GAS (BSPP)		
G 1/8		GA
G 1/8 WITH PLUG		DA
G 1/4		GB
G 1/4 WITH PLUG		DB
11	**Indicators**	**CODE**
None		G
Pressure/vac. gauge rear. conn.		M
Pressure/vac. gauge rad. conn.		N
Visual indicator		P
Electrical indicator		S

Standard

On request

Note: On request steel bowl is available for HF502-10 and HF502-20.

Replaces: 01/10.99

FILTERING ELEMENTS - TECHNICAL DATA

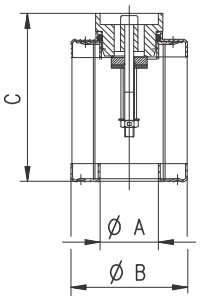

DI14-D03/0501

Element type	Ø A	Ø B	C	Standard filtering surface	
	mm	mm	mm	cm²	
				FB	SP / RP
HE K02-10.060	26	52	75	225	400
HE K02-10.129	24,6		148,4	490	860
HE K02-20.077	29	70	94,7	445	850
HE K02-20.122			139,7	615	1350
HE K02-20.201	41		219,7	930	2035
HE K02-30.162	41	99	179,2	1700	3000
HE K02-30.195			212,2	2050	4485
HE K02-30.239			256,2	2510	5500
HE K02-40.122	52	130	139,2	2175	4810
HE K02-40.162	65		179,2	2625	5335
HE K02-40.194	52		212,2	3160	6425
HE K02-40.195	65				
HE K02-40.239			256,2	4390	7875

Di14-002 - 02/10.01

HOW TO ORDER A REPLACEMENT ELEMENT

1	2	3	4	5	6
HE K02-10.060	- AS	- FB060	- VM	- B17	- B

1	Element type	CODE
See table		HE K...
2	**Superficie filtrante**	**CODE**
Standard		AS
3	**Grado di filtrazione**	**CODE**
See table ref. 3		

4	By-pass valve	CODE
With valve and spring		VM
With valve - without spring		VV
Without valve - without spring		OO
5	**Setting valve**	**CODE**
See table ref. 4		

6	Seals	CODE
See table ref. 6		

Table how to order a complete filter.

TECHNICAL CHARACTERISTICS

The tank mounted filters HF 547 series are specifically designed to be directly connected on the return line of hydraulic circuits and provide versatility to safeguard the circuit components from contaminating particles.
The standard filters are supplied with by-pass valve calibrated at 25 psi (1,7 bar).

- Flow up to 53 US gpm (200 l/min)
- Maximum working pressure 116 psi (8 bar)
- Pressurized air breather
- Antisplash system
- Anodized housing
- Level dipstick
- Bowl extension

MATERIALS	
Cover	Reinforced nylon
Housing	Anodized aluminum
Bowl	Reinforced nylon
	Steel (on request)
Seals	Buna - Viton
Inner cap	Zinc plated steel
Inner tube	Zinc plated steel
Filter media	Steel
	Stainless steel
	Cellulose
	Reinforced cellulose
	Micro-fibre glass

FLUID COMPATIBILITY Conforming to ISO 2943 (Norm ISO 6743/4)	
Oli mineral (1)	HH - HL - HM - HR - HV - HG
Water emulsion (1)	HFAE - HFAS
Water glycol (1)	HFC
Syntetic fluid (2)	HS - HFDR - HFDU - HFDS

(1) With Buna seals
(2) With Viton seals

FLOW	
Flow max.	53 US gpm (200 l/min)

PRESSURE	
Working pressure	116 psi (8 bar)
Testing pressure	175 psi (12 bar)
Burst pressure	230 psi (16 bar)
Element collapse pressure rating (conforming to ISO 2941)	145 psi (10 bar)

BY-PASS VALVE	
By-pass setting	25 psi (1,7 bar)

OPERATING TEMPERATURE		
With Buna seals	-22	195 °F (-30 90 °C)
With Viton seals	-4	230 °F (-20 110 °C)

DEGREE OF FILTRATION

Absolute Filtration

Code	Material	Degree of filtration
FG003	Micro-fibre glass	3 m
FG006	Micro-fibre glass	6 m
FG010	Micro-fibre glass	10 m
FG025	Micro-fibre glass	25 m

Nominal Filtration

Code	Material	Degree of filtration
SP010	Cellulose	10 m
RP010	Reinforced cellulose	10 m
SP025	Cellulose	25 m
RP025	Reinforced cellulose	25 m
MI025	Stainless steel	25 m
MI060	Stainless steel	60 m
MS090	Steel	90 m
MI125	Stainless steel	125 m

INDICATORS (3)
Rear manometer
Radial manometer
Visual indicator
Electrical indicator

(3) Characteristics and dimensions at page 18

01/07.2009

SIZING – PRESSURE DROP

The total pressure drop of the filter is calculated by summing the pressure drop value in the housing to the one in the filtering element.

Total p p in housing + p in element

In filters of HF 547 series in normal working conditions, the total p must not be more than 5.8 psi (0,4 bar).
To establish the values of pressure drop involved, the following pages provide some diagrams with curves referred to the use of mineral oils SAE 10 with kinematic viscosity of 120 SSU (30 cSt) and density of 7.29 lb/gal (0,856 kg/dm^3).

Calculation example

Filter HF547-20.201-AS-FG025-B17-GG-B-S-Z-XN-G-YN-A-K
Flow rate= 29 US gpm (110 l/min)
Kinematic viscosity: 120 SSU (30 cSt)
Oil density : 7.29 lb/gal (0,856 kg/dm^3)
Filtering degree: 25 m

Data obtained from the diagrams:
p in housing = 2.00 psi (0,14 bar) (page 4)
p in element = 3,2 psi (0,22 bar) (page 8)
Total p = 2.00 + 3.2 = 5.2 psi (0,36 bar) (p is lower than maximum value admitted – therefore sizing is correct).

If oil with different kinematic viscosity and different density is used, the values obtained from the diagrams will be re-calculated considering the following indications:

1) The pressure drop of the housing is proportional with the oil density, therefore for oil with density different to 7.29 lb/gal (0,856 kg/dm^3) the value of the p in the head-bowl will be:

$$\textbf{p in housing} = \frac{\textbf{p} \text{ of diagram (psi)} \cdot \text{Oil density (lb/gal)}}{7.29 \text{ (lb/gal)}} \quad \text{[psi]}$$

Or

$$\textbf{p in housing} = \frac{\textbf{p} \text{ of diagram (bar)} \cdot \text{Oil density (kg/dm}^3\text{)}}{0{,}856 \text{ (kg/dm}^3\text{)}} \quad \text{[bar]}$$

2) The pressure drop of the element is proportional with the oil density and kinematic viscosity, therefore for oil with density different to 7.29 lb/gal (0,856 kg/dm^3) and kinematic viscosity different to 120 SSU (30 cSt) the value of p in the element will be:

$$\textbf{p element} = \textbf{p} \text{ of diagram (psi)} \cdot \frac{\text{Oil density (lb/gal)}}{7.29 \text{ (lb/gal)}} \cdot \frac{\text{Oil viscosity (SSU)}}{120 \text{ (SSU)}} \quad \text{[psi]}$$

Or

$$\textbf{p element} = \textbf{p} \text{ of diagram (bar)} \cdot \frac{\text{Oil density (kg/dm}^3\text{)}}{0{,}856 \text{ (kg/dm}^3\text{)}} \cdot \frac{\text{Oil viscosity (cSt)}}{30 \text{ (cSt)}} \quad \text{[bar]}$$

01/07.2009

Now you sum the values of the pressure drop of the housing to the value of the pressure drop of the filtering element, always making sure the total p does not exceed the pressure limit of 5.8 psi (0,4 bar).

PRESSURE DROP CURVES THROUGH THE BY-PASS VALVES

The pressure drop values are directly proportional with the specific weight of the fluid and do not affect the establishment of the total pressure drop of the complete filter.

The curves are obtained in the following conditions:
Mineral oil type SAE 10
Kinematic viscosity 120 SSU (30 cSt)
Density 7.29 lb/gal (0,856 kg/dm^3).

HF 547-10

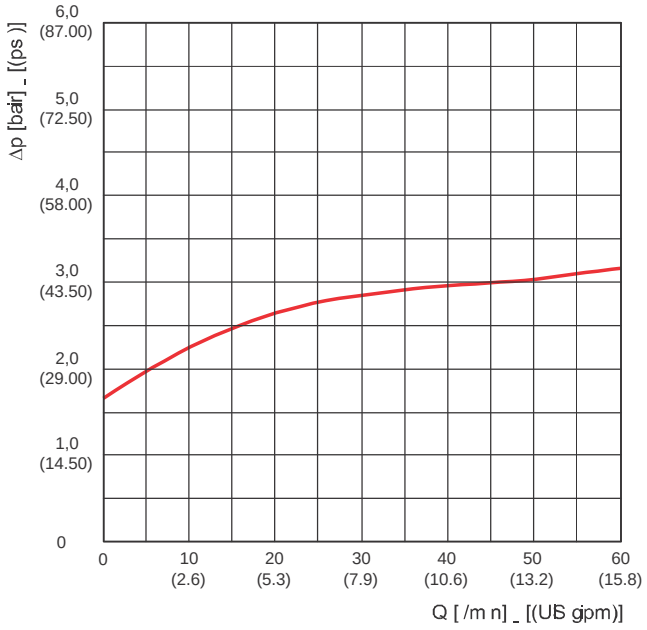

HF 547-20

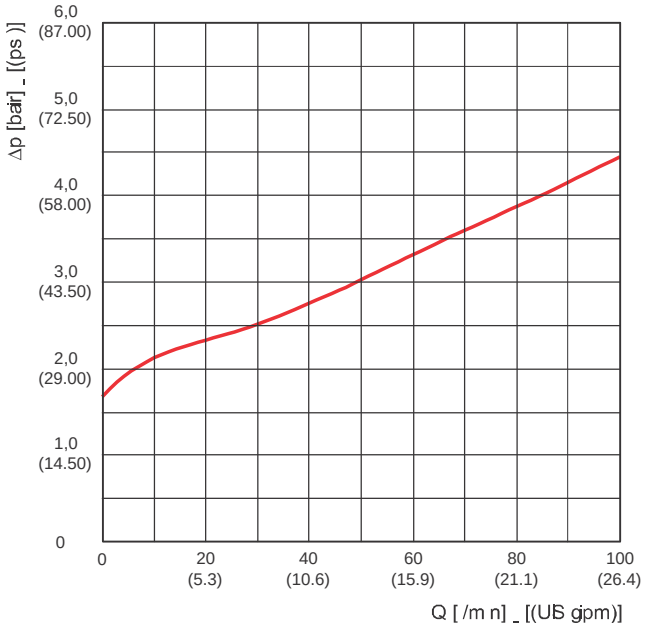

01/07.2009

PRESSURE DROP CURVES THROUGH THE HOUSING

The curves are obtained in the following conditions:
Mineral oil type SAE 10
Kinematic viscosity 120 SSU (30 cSt)
Density 7.29 lb/gal (0,856 kg/dm^3).

(1) G 3/8
(2) G 1/2
(3) G 3/4
(4) G 1
(5) G 1 1/4

HF 547-10

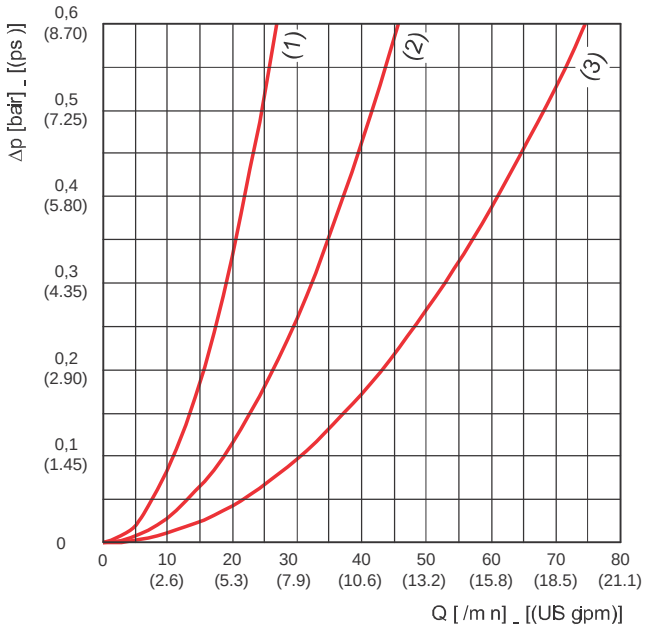

HF 547-20.077 / 20.122

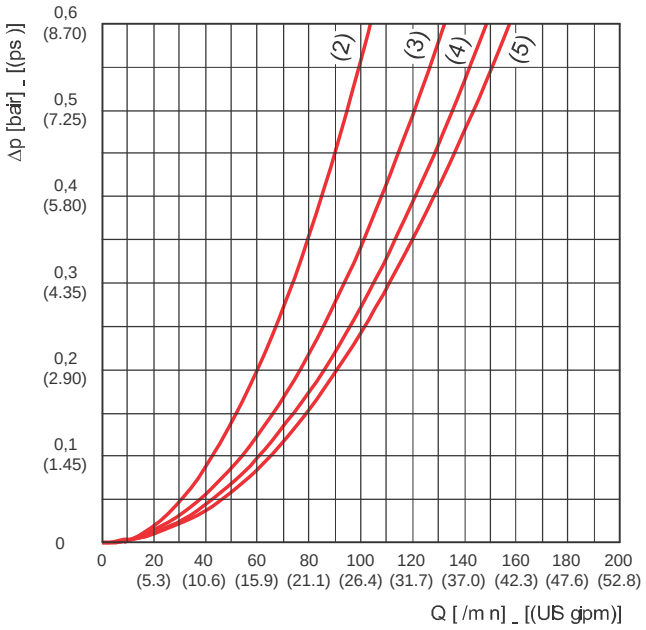

HF 547-20.201 / 20.280

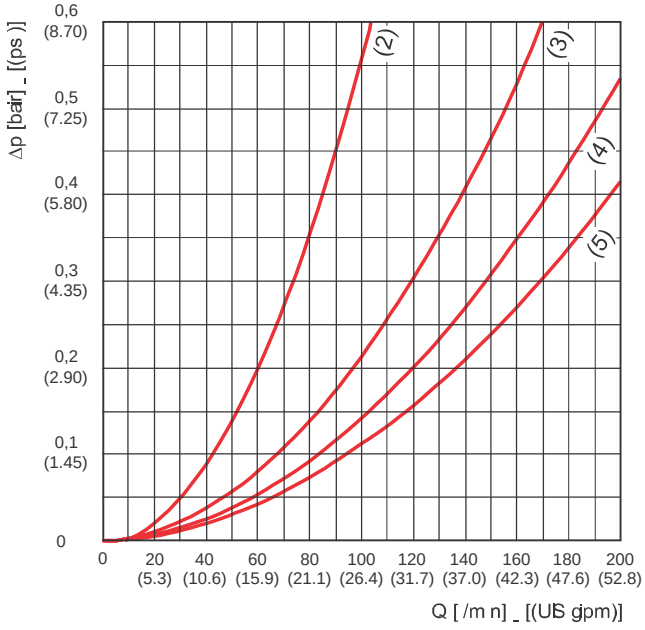

01/07.2009

PRESSURE DROP CURVES THROUGH THE ELEMENT HEK02-08

The curves are obtained in the following conditions:
Mineral oil type SAE 10
Kinematic viscosity 120 SSU (30 cSt)
Density 7.29 lb/gal (0,856 kg/dm^3).

(1) HE K02-08.095
(2) HE K02-08.145
(3) HE K02-08.195

FG003

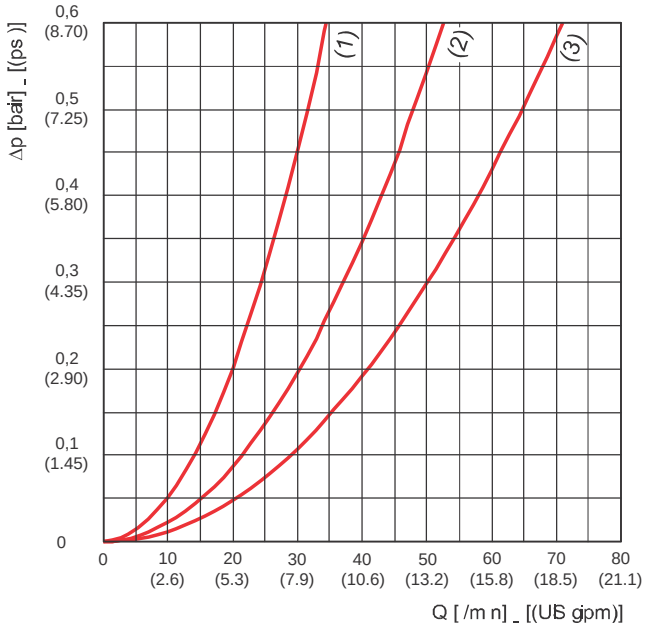

FG006

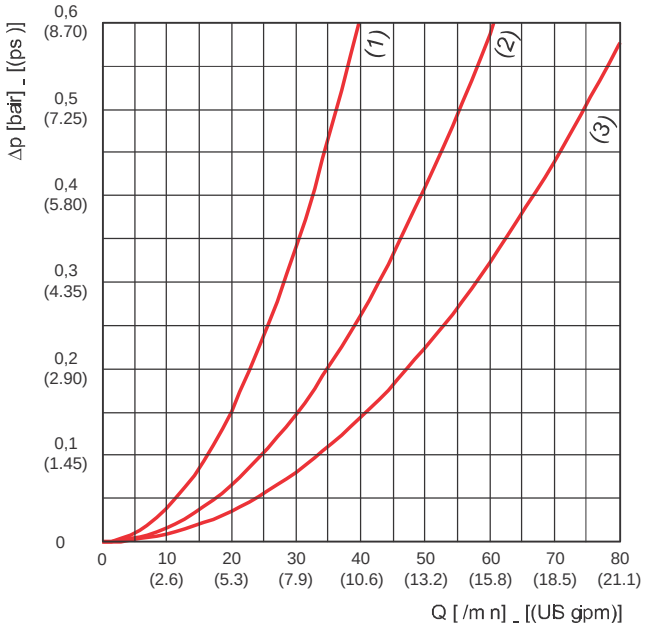

FG010

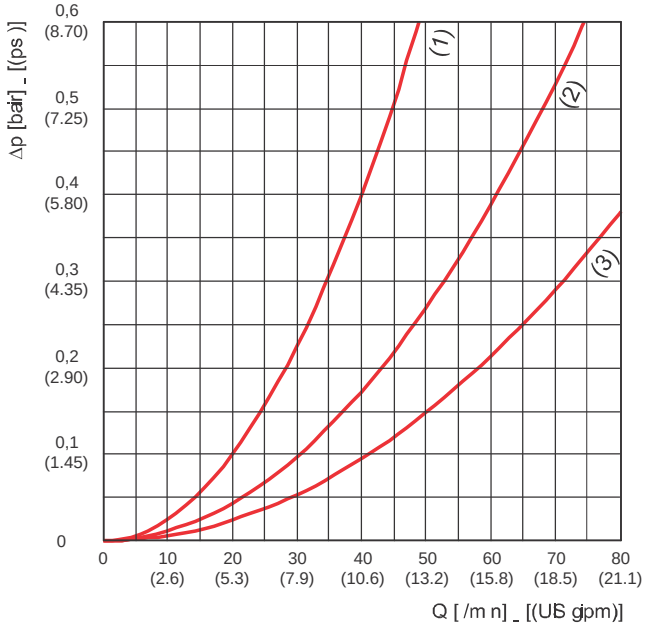

FG025

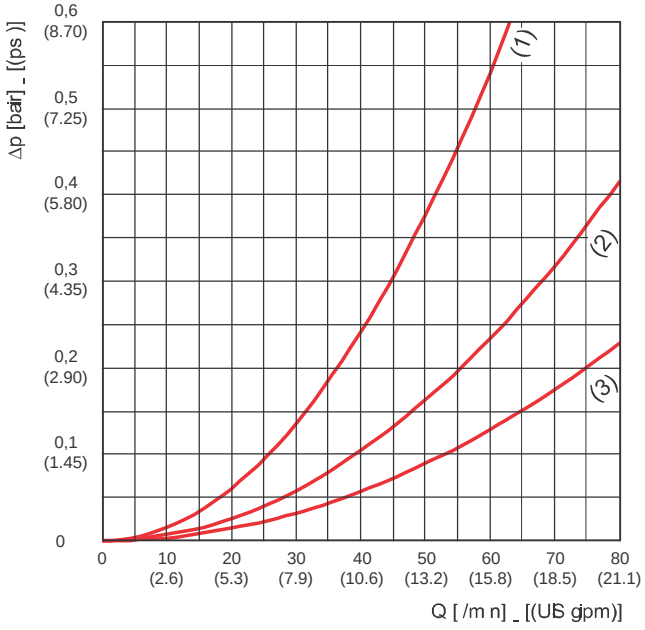

01/07.2009

PRESSURE DROP CURVES THROUGH THE ELEMENT HEK02-08

The curves are obtained in the following conditions:
Mineral oil type SAE 10
Kinematic viscosity 120 SSU (30 cSt)
Density 7.29 lb/gal (0,856 kg/dm^3).

(1) HE K02-08.095
(2) HE K02-08.145
(3) HE K02-08.195

MI025

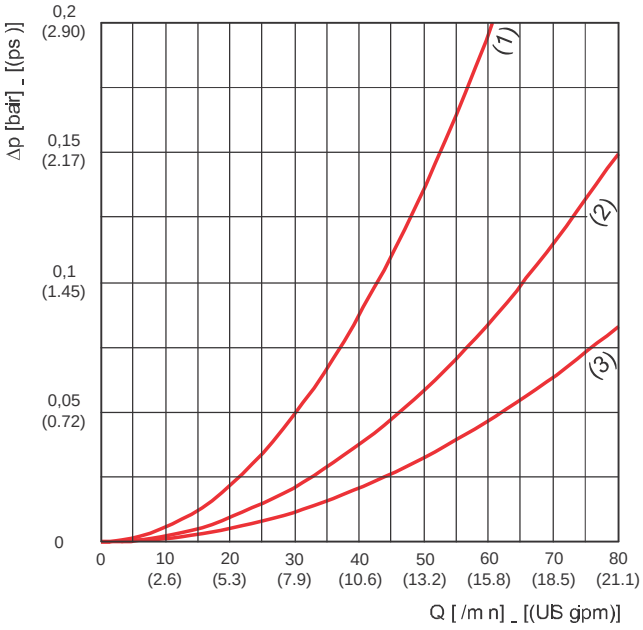

MI060

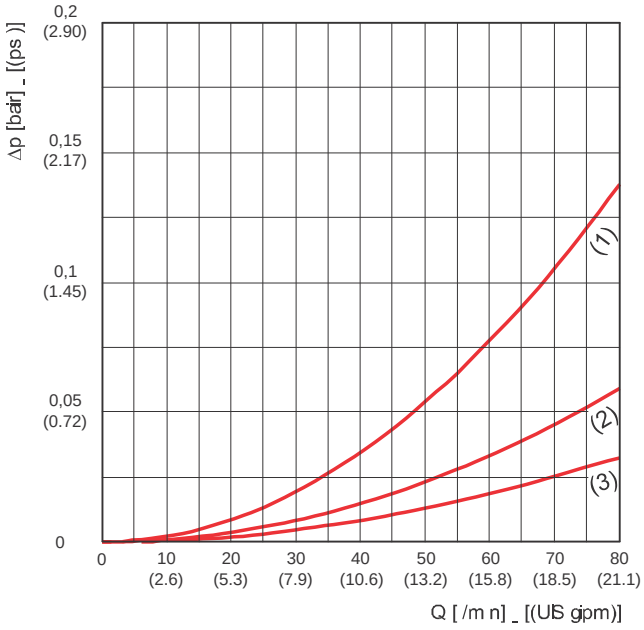

MS090

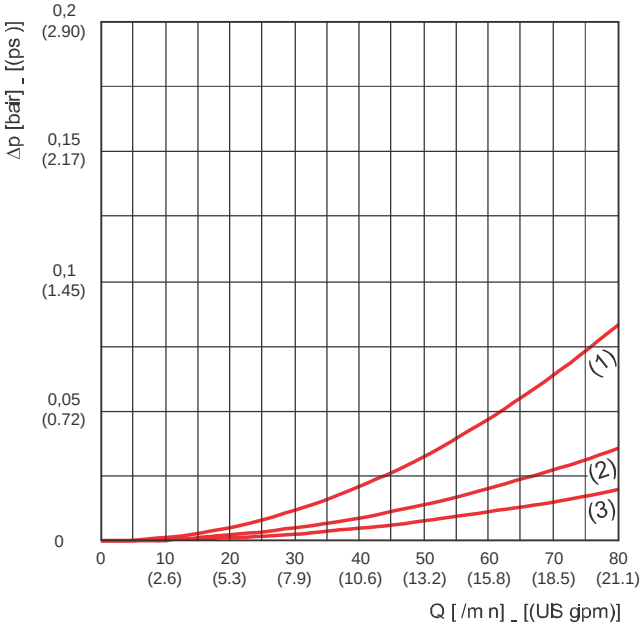

MI125

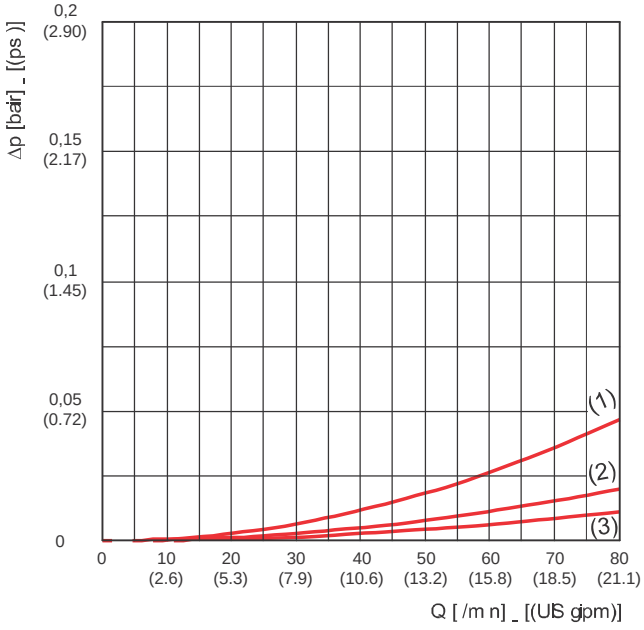

01/07.2009

PRESSURE DROP CURVES THROUGH THE ELEMENT HEK02-08

The curves are obtained in the following conditions:
Mineral oil type SAE 10
Kinematic viscosity 120 SSU (30 cSt)
Density 7.29 lb/gal (0,856 kg/dm^3).

(1) HE K02-08.095
(2) HE K02-08.145
(3) HE K02-08.195

RP010 / SP010

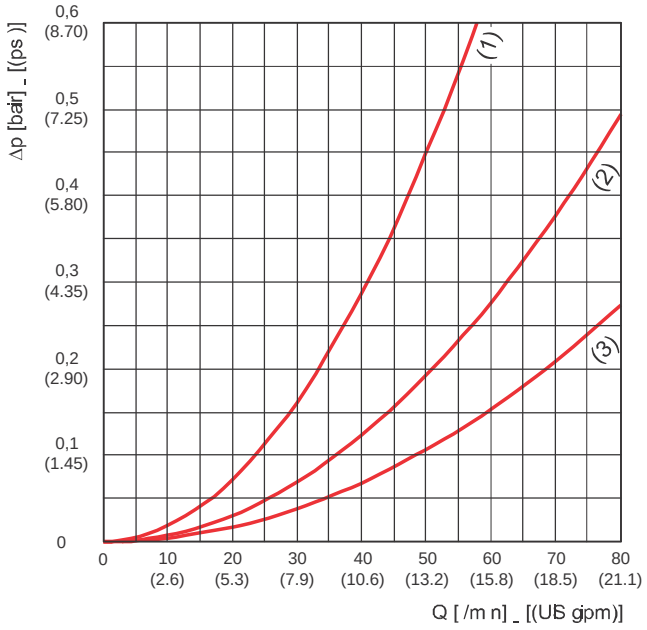

RP025 / SP025

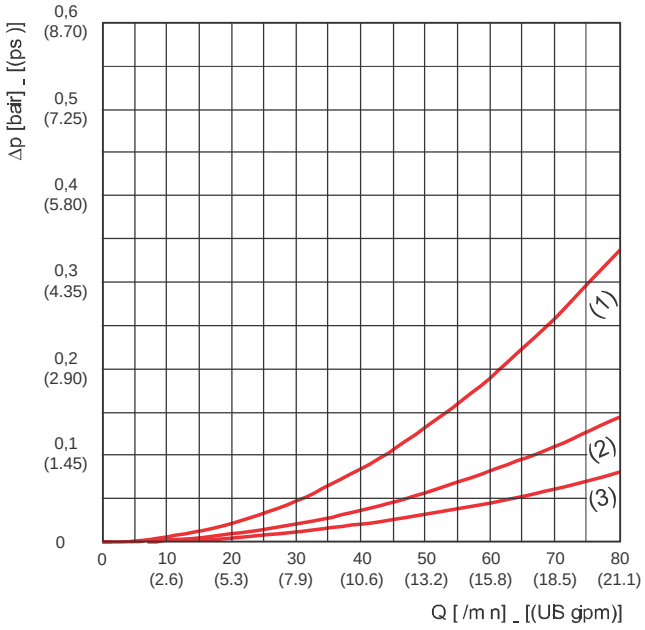

01/07.2009

PRESSURE DROP CURVES THROUGH THE ELEMENT HEK02-20

The curves are obtained in the following conditions:
Mineral oil type SAE 10
Kinematic viscosity 120 SSU (30 cSt)
Density 7.29 lb/gal (0,856 kg/dm^3).

(1) HEK02-20.077
(2) HEK02-20.122
(3) HEK02-20.201
(4) HEK02-20.280

FG003

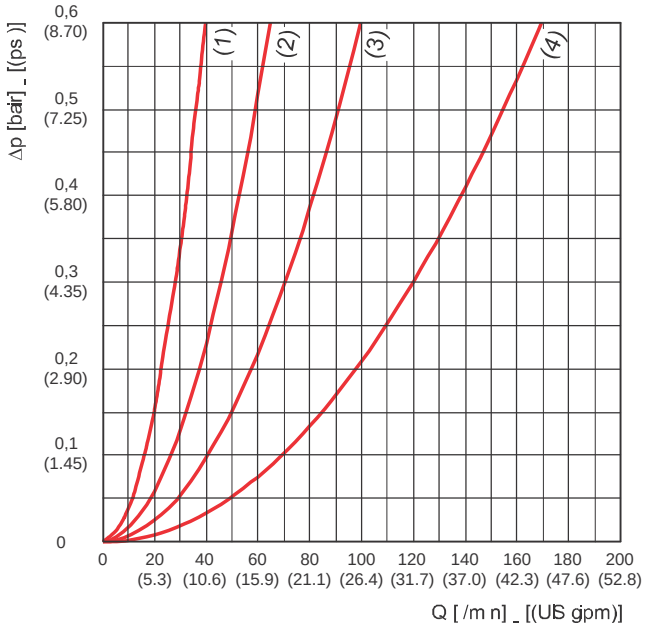

FG006

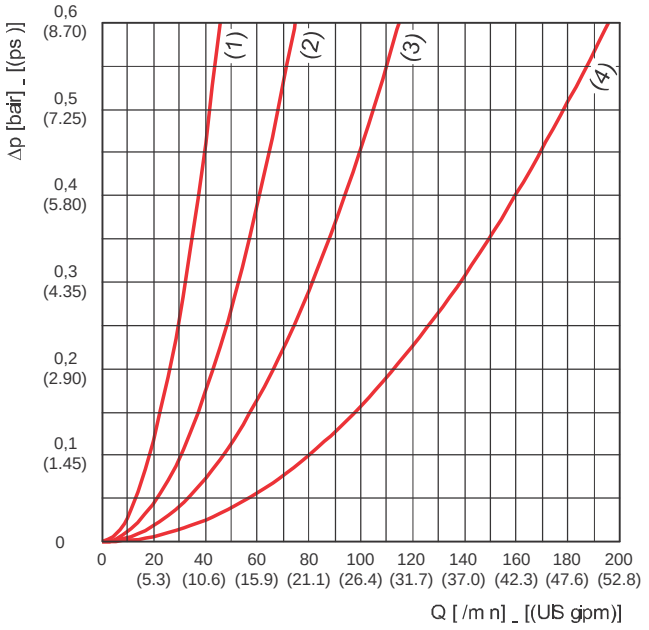

FG010

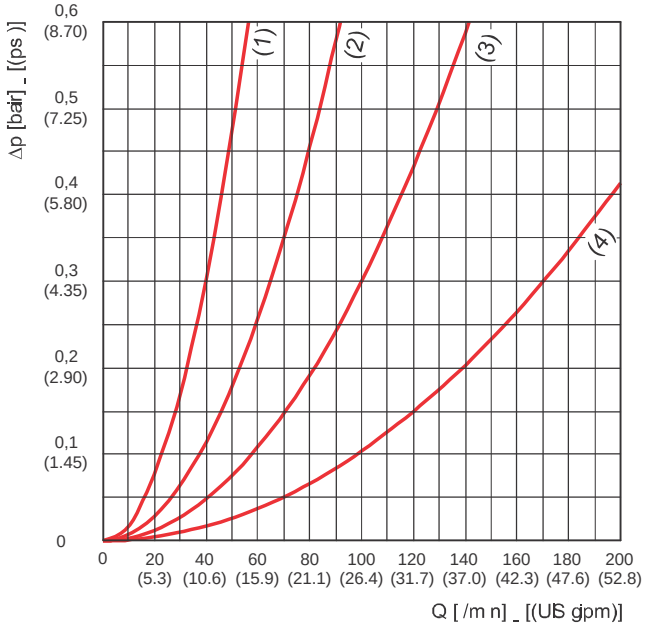

FG025

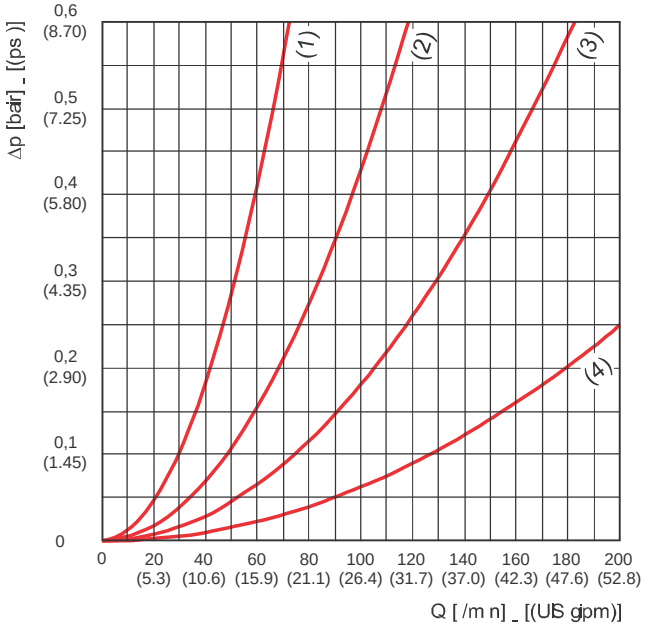

01/07.2009

PRESSURE DROP CURVES THROUGH THE ELEMENT HEK02-20

The curves are obtained in the following conditions:
Mineral oil type SAE 10
Kinematic viscosity 120 SSU (30 cSt)
Density 7.29 lb/gal (0,856 kg/dm^3).

(1) HEK02-20.077
(2) HEK02-20.122
(3) HEK02-20.201
(4) HEK02-20.280

MI025

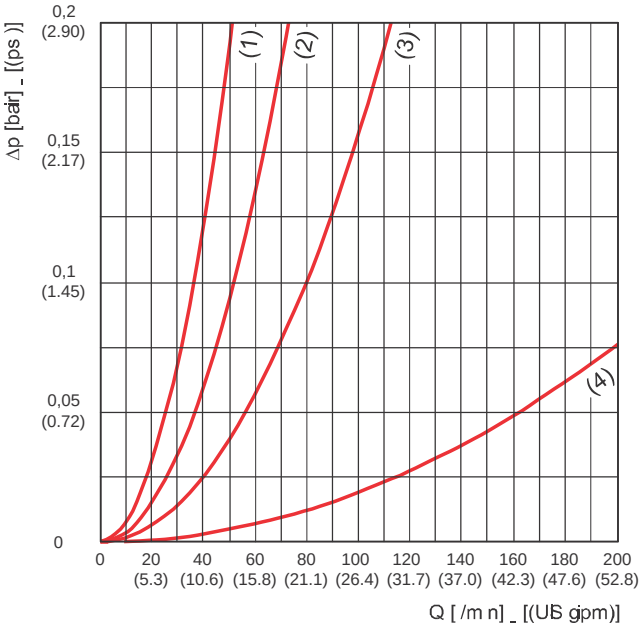

MI060

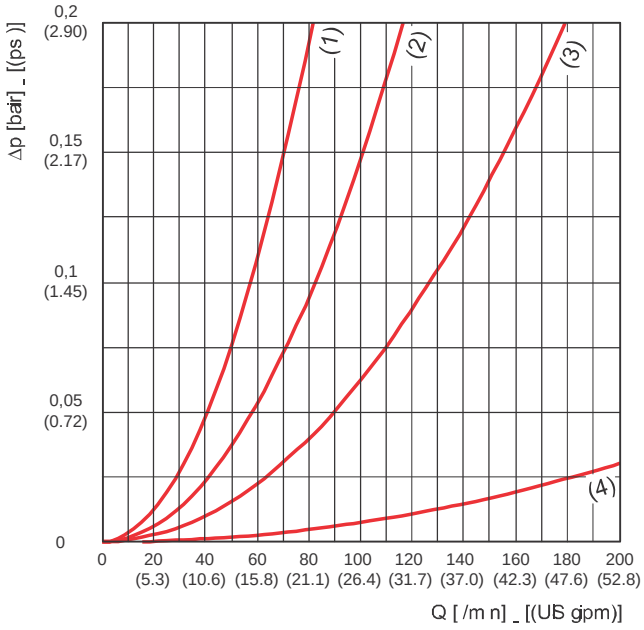

MS090

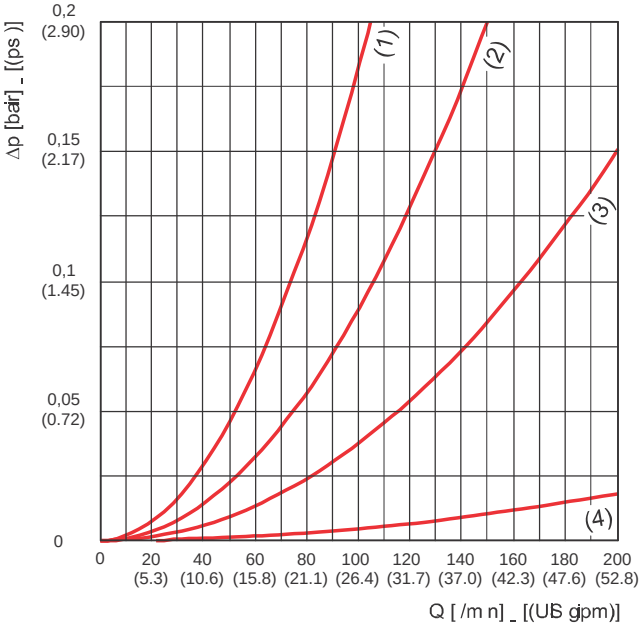

MI125

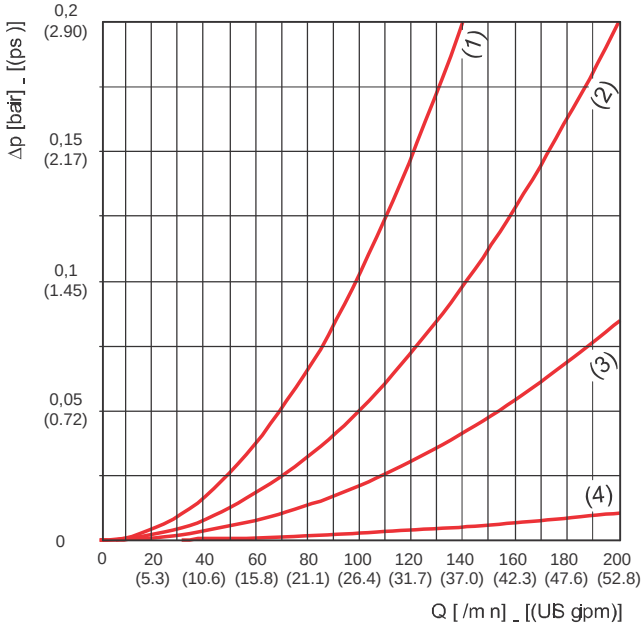

01/07.2009

PRESSURE DROP CURVES THROUGH THE ELEMENT HEK02-20

The curves are obtained in the following conditions:
Mineral oil type SAE 10
Kinematic viscosity 120 SSU (30 cSt)
Density 7.29 lb/gal (0,856 kg/dm^3).

(1) HEK02-20.077
(2) HEK02-20.122
(3) HEK02-20.201
(4) HEK02-20.280

RP010 / SP010

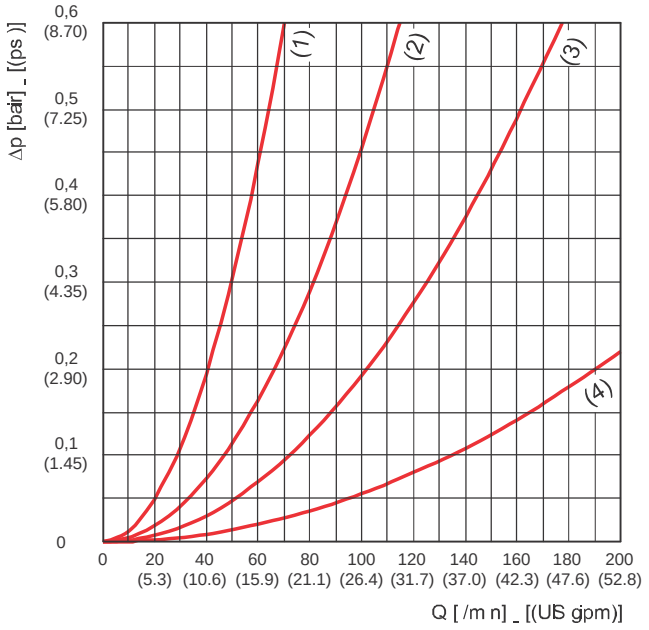

RP025 / SP025

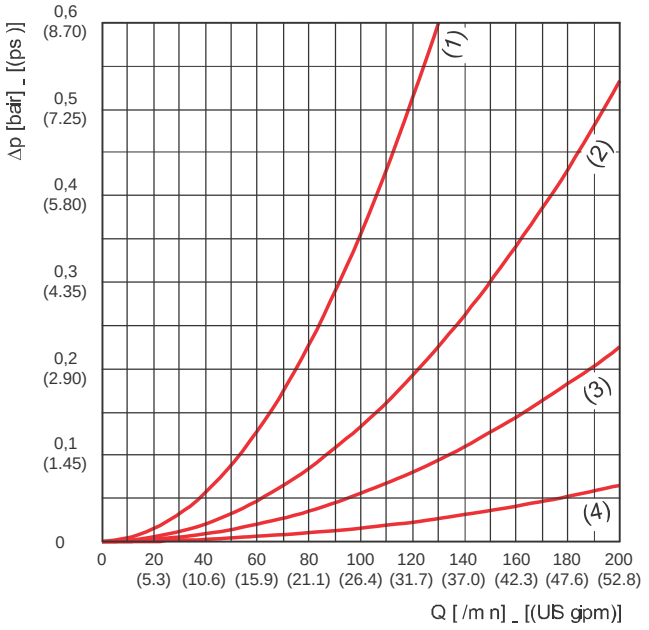

01/07.2009

MICRO-FIBRE GLASS FLOWS

Filter type	Ports			Degree of filtration			
				FG003	FG006	FG010	FG025
				Flow p= 5.8 psi (0,4 bar) ("AS" version values)			
	GAS (BSPP)	NPT	SAE J514b	US gpm (l/min)			
HF 547-10.095	G 3/8	3/8 NPT	9/16-18 UNF-2B	4.0 (15)	4.0 (15)	5.3 (20)	5.3 (20)
	G 1/2	1/2 NPT	3/4-16 UNF-2B	5.3 (20)	5.3 (20)	6.6 (25)	7.9 (30)
	G 3/4	3/4 NPT	1 1/16-12 UNF-2B	6.6 (25)	6.6 (25)	7.9 (30)	10.6 (40)
HF 547-10.145	G 3/8	3/8 NPT	9/16-18 UNF-2B	5.3 (20)	5.3 (20)	5.3 (20)	5.3 (20)
	G 1/2	1/2 NPT	3/4-16 UNF-2B	6.6 (25)	7.9 (30)	7.9 (30)	9.2 (35)
	G 3/4	3/4 NPT	1 1/16-12 UNF-2B	9.2 (35)	9.2 (35)	10.6 (40)	13.2 (50)
HF 547-10.195	G 3/8	3/8 NPT	9/16-18 UNF-2B	5.3 (20)	5.3 (20)	5.3 (20)	5.3 (20)
	G 1/2	1/2 NPT	3/4-16 UNF-2B	7.9 (30)	7.9 (30)	9.2 (35)	9.2 (35)
	G 3/4	3/4 NPT	1 1/16-12 UNF-2B	10.6 (40)	11.9 (45)	13.2 (50)	14.5 (55)
HF 547-20.077	G 1/2	1/2 NPT	3/4-16 UNF-2B	7.9 (30)	7.9 (30)	10.6 (40)	13.2 (50)
	G 3/4	3/4 NPT	1 1/16-12 UNF-2B	7.9 (30)	7.9 (30)	10.6 (40)	13.2 (50)
	G 1	1 NPT	1 5/16-12 UNF-2B	7.9 (30)	7.9 (30)	10.6 (40)	13.2 (50)
	G 1 1/4	1 1/4 NPT	1 5/8-12 UNF-2B	7.9 (30)	7.9 (30)	10.6 (40)	13.2 (50)
HF 547-20.122	G 1/2	1/2 NPT	3/4-16 UNF-2B	10.6 (40)	13.2 (50)	15.9 (60)	15.9 (60)
	G 3/4	3/4 NPT	1 1/16-12 UNF-2B	10.6 (40)	13.2 (50)	15.9 (60)	18.5 (70)
	G 1	1 NPT	1 5/16-12 UNF-2B	13.2 (50)	13.2 (50)	15.9 (60)	18.5 (70)
	G 1 1/4	1 1/4 NPT	1 5/8-12 UNF-2B	13.2 (50)	13.2 (50)	15.9 (60)	21.1 (80)
HF 547-20.201	G 3/4	3/4 NPT	1 1/16-12 UNF-2B	18.5 (70)	21.1 (80)	23.8 (90)	26.4 (100)
	G 1	1 NPT	1 5/16-12 UNF-2B	18.5 (70)	21.1 (80)	23.8 (90)	29.0 (110)
	G 1 1/4	1 1/4 NPT	1 5/8-12 UNF-2B	18.5 (70)	21.1 (80)	26.4 (100)	31.7 (120)
HF 547-20.280	G 3/4	3/4 NPT	1 1/16-12 UNF-2B	26.4 (100)	29.0 (110)	29.0 (110)	31.7 (120)
	G 1	1 NPT	1 5/16-12 UNF-2B	29.0 (110)	31.7 (120)	34.3 (130)	37.0 (140)
	G 1 1/4	1 1/4 NPT	1 5/8-12 UNF-2B	29.0 (110)	31.7 (120)	37.0 (140)	42.3 (160)

01/07.2009

CELLULOSE FLOWS

Filter type	Ports			Degree of filtration	
				RP010 / SP010	RP025 / SP025
				Flow	
				p= 5.8 psi (0,4 bar) ("AS" version values)	
	GAS (BSPP)	NPT	SAE J514b	US gpm (l/min)	
HF 547-10.095	G 3/8	3/8 NPT	9/16-18 UNF-2B	5.3 (20)	5.3 (20)
	G 1/2	1/2 NPT	3/4-16 UNF-2B	7.9 (30)	9.2 (35)
	G 3/4	3/4 NPT	1 1/16-12 UNF-2B	9.2 (35)	13.2 (50)
HF 547-10.145	G 3/8	3/8 NPT	9/16-18 UNF-2B	5.3 (20)	5.3 (20)
	G 1/2	1/2 NPT	3/4-16 UNF-2B	7.9 (30)	9.2 (35)
	G 3/4	3/4 NPT	1 1/16-12 UNF-2B	11.9 (45)	14.5 (55)
HF 547-10.195	G 3/8	3/8 NPT	9/16-18 UNF-2B	5.3 (20)	5.3 (20)
	G 1/2	1/2 NPT	3/4-16 UNF-2B	9.2 (35)	9.2 (35)
	G 3/4	3/4 NPT	1 1/16-12 UNF-2B	13.2 (50)	15.9 (60)
HF 547-20.077	G 1/2	1/2 NPT	3/4-16 UNF-2B	13.2 (50)	15.9 (60)
	G 3/4	3/4 NPT	1 1/16-12 UNF-2B	13.2 (50)	18.5 (70)
	G 1	1 NPT	1 5/16-12 UNF-2B	13.2 (50)	21.1 (80)
	G 1 1/4	1 1/4 NPT	1 5/8-12 UNF-2B	13.2 (50)	21.1 (80)
HF 547-20.122	G 1/2	1/2 NPT	3/4-16 UNF-2B	15.9 (60)	21.1 (80)
	G 3/4	3/4 NPT	1 1/16-12 UNF-2B	18.5 (70)	23.8 (90)
	G 1	1 NPT	1 5/16-12 UNF-2B	18.5 (70)	26.4 (100)
	G 1 1/4	1 1/4 NPT	1 5/8-12 UNF-2B	18.5 (70)	26.4 (100)
HF 547-20.201	G 3/4	3/4 NPT	1 1/16-12 UNF-2B	26.4 (100)	31.7 (120)
	G 1	1 NPT	1 5/16-12 UNF-2B	29.0 (110)	39.7 (150)
	G 1 1/4	1 1/4 NPT	1 5/8-12 UNF-2B	31.7 (120)	42.3 (160)
HF 547-20.280	G 3/4	3/4 NPT	1 1/16-12 UNF-2B	31.7 (120)	37.0 (140)
	G 1	1 NPT	1 5/16-12 UNF-2B	39.7 (150)	44.9 (170)
	G 1 1/4	1 1/4 NPT	1 5/8-12 UNF-2B	42.3 (160)	50.2 (190)

01/07.2009

STEEL WIRE MESH FLOWS

Filter type	Ports			Degree of filtration			
				MI025	MI060	MS090	MI125
				Flow p= 5.8 psi (0,4 bar) ("AS" version values)			
	GAS (BSPP)	NPT	SAE J514b	US gpm (l/min)			
HF 547-10.095	G 3/8	3/8 NPT	9/16-18 UNF-2B	5.3 (20)	5.3 (20)	5.3 (20)	5.3 (20)
	G 1/2	1/2 NPT	3/4-16 UNF-2B	9.2 (35)	9.2 (35)	9.2 (35)	9.2 (35)
	G 3/4	3/4 NPT	1 1/16-12 UNF-2B	13.2 (50)	14.5 (55)	15.9 (60)	15.9 (60)
HF 547-10.145	G 3/8	3/8 NPT	9/16-18 UNF-2B	5.3 (20)	5.3 (20)	5.3 (20)	5.3 (20)
	G 1/2	1/2 NPT	3/4-16 UNF-2B	9.2 (35)	9.2 (35)	9.2 (35)	9.2 (35)
	G 3/4	3/4 NPT	1 1/16-12 UNF-2B	14.5 (55)	15.9 (60)	15.9 (60)	15.9 (60)
HF 547-10.195	G 3/8	3/8 NPT	9/16-18 UNF-2B	5.3 (20)	5.3 (20)	5.3 (20)	5.3 (20)
	G 1/2	1/2 NPT	3/4-16 UNF-2B	9.2 (35)	9.2 (35)	9.2 (35)	9.2 (35)
	G 3/4	3/4 NPT	1 1/16-12 UNF-2B	15.9 (60)	15.9 (60)	15.9 (60)	15.9 (60)
HF 547-20.077	G 1/2	1/2 NPT	3/4-16 UNF-2B	13.2 (50)	18.5 (70)	18.5 (70)	21.1 (80)
	G 3/4	3/4 NPT	1 1/16-12 UNF-2B	15.9 (60)	21.1 (80)	23.8 (90)	23.8 (90)
	G 1	1 NPT	1 5/16-12 UNF-2B	15.9 (60)	21.1 (80)	23.8 (90)	26.4 (100)
	G 1 1/4	1 1/4 NPT	1 5/8-12 UNF-2B	15.9 (60)	23.8 (90)	26.4 (100)	29.0 (110)
HF 547-20.122	G 1/2	1/2 NPT	3/4-16 UNF-2B	15.9 (60)	18.5 (70)	21.1 (80)	21.1 (80)
	G 3/4	3/4 NPT	1 1/16-12 UNF-2B	18.5 (70)	23.8 (90)	26.4 (100)	26.4 (100)
	G 1	1 NPT	1 5/16-12 UNF-2B	21.1 (80)	26.4 (100)	29.0 (110)	29.0 (110)
	G 1 1/4	1 1/4 NPT	1 5/8-12 UNF-2B	21.1 (80)	26.4 (100)	29.0 (110)	31.7 (120)
HF 547-20.201	G 3/4	3/4 NPT	1 1/16-12 UNF-2B	26.4 (100)	31.7 (120)	34.3 (130)	34.3 (130)
	G 1	1 NPT	1 5/16-12 UNF-2B	31.7 (120)	37.0 (140)	39.7 (150)	42.3 (160)
	G 1 1/4	1 1/4 NPT	1 5/8-12 UNF-2B	31.7 (120)	42.3 (160)	44.9 (170)	47.6 (180)
HF 547-20.280	G 3/4	3/4 NPT	1 1/16-12 UNF-2B	34.3 (130)	37.0 (140)	37.0 (140)	37.0 (140)
	G 1	1 NPT	1 5/16-12 UNF-2B	42.3 (160)	44.9 (170)	44.9 (170)	44.9 (170)
	G 1 1/4	1 1/4 NPT	1 5/8-12 UNF-2B	44.9 (170)	50.2 (190)	52.8 (200)	52.8 (200)

01/07.2009

HF547-10 DIMENSIONS

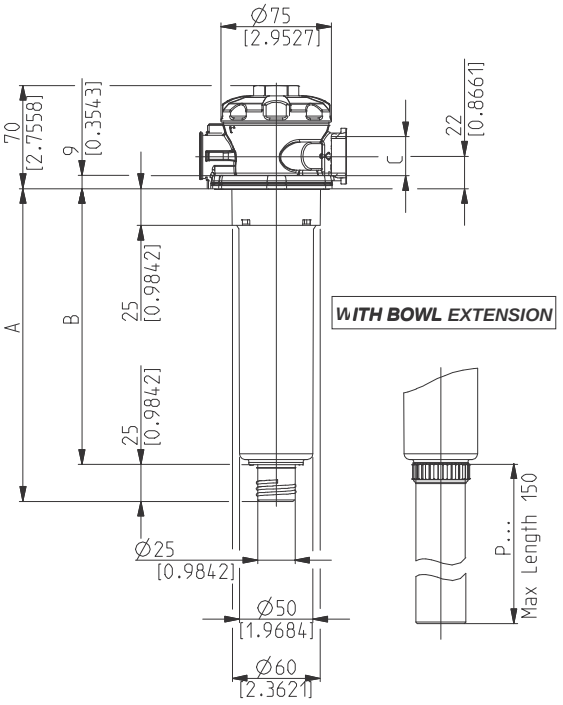

WITH BOWL EXTENSION

WITH AIR BREATHER

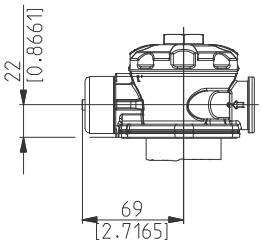

WITH ANTISPLASH

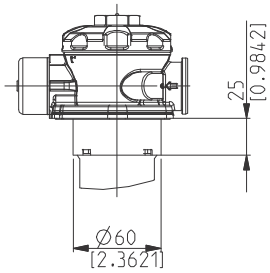

WITH PRESSURIZED AIR BREATHER

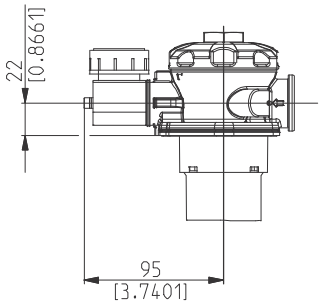

WITH LEVEL DIPSTICK

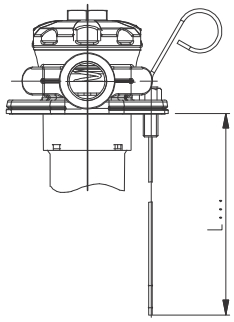

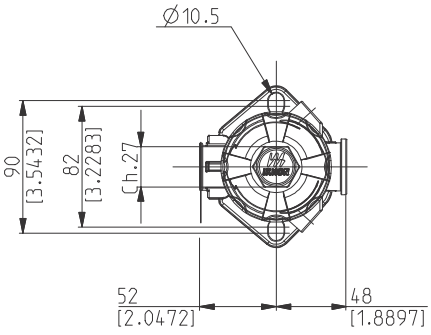

RESERVOIR MOUNTING HOLE DIMENSIONS

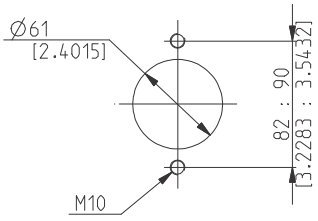

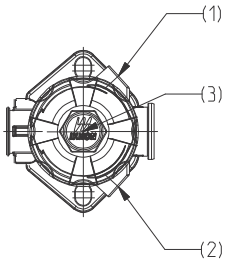

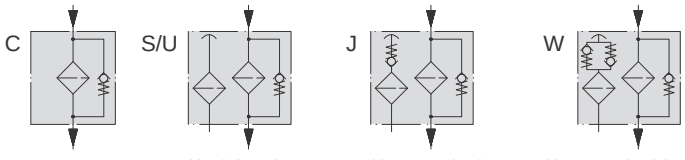

With By-pass | With air breather | With pressurized air breather | With pressurized breather and air suction

* ***Antifoam diffusers are available.***

Filter type	Weight	A	B	C (GAS - BSPP)		(1) (2) (GAS-BSPP) Secondary inlet	(1) (2) (3) (GAS - BSPP) Indicators
	kg(lbs)	mm(in)	mm(in)	Standard	On request	Standard	
HF 547-10.095	0,50 (1.10)	112 (4.4094)	87 (3.4251)	G 1/2	G 3/8 - G 3/4	G 1/4	G 1/8
HF 547-10.145	0,55 (1.21)	162 (6.3779)	137 (5.3936)	G 3/4	G 3/8 - G 1/2		
HF 547-10.195	0,60 (1.32)	212 (8.3464)	187 (7.3621)				

NPT, metric and SAE UN-UNF threads are available (consult our technical department).

ICAT_021_009_HF547

01/07.2009

HF547-20 DIMENSIONS

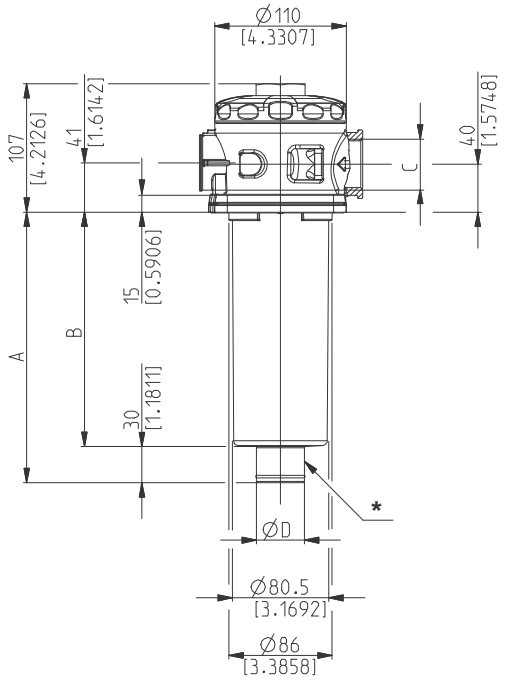

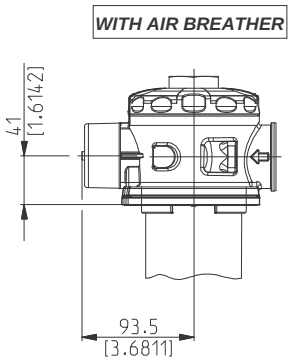

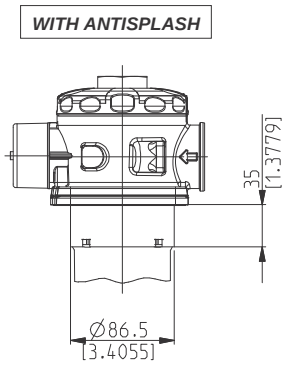

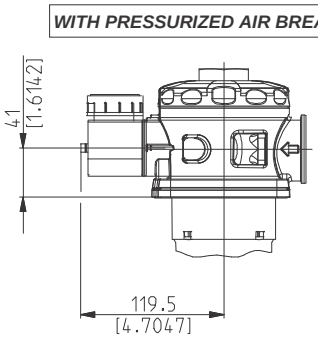

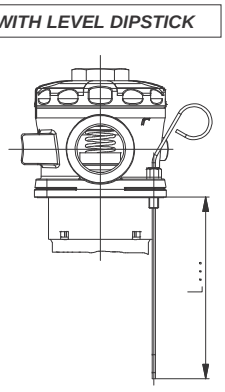

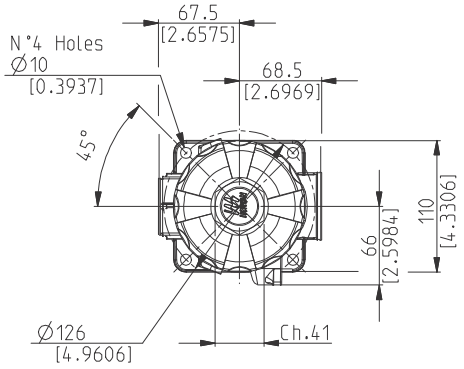

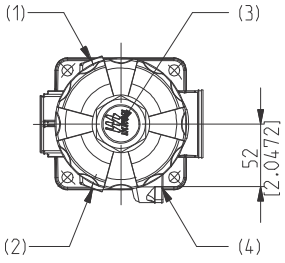

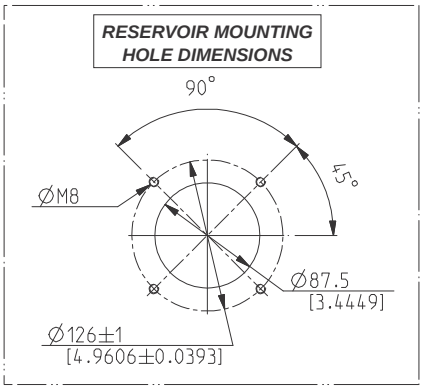

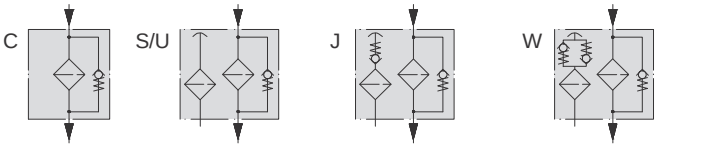

* ***Flexible extension bowls and antifoam diffusers are available.***

Filter type	Weight	A	B	C (GAS - BSPP)		ØD	(4) (GAS - BSPP) Secondary inlet		(1)(2)(3) (GAS-BSPP) Indicators
	kg(lbs)	mm(in)	mm(in)	Standard	On request	mm(in)	Standard	On request	
HF 547-20.077	1,10 (2.42)	103 (4.0551)	74 (2.9133)	G 3/4	G 1/2 - G 1 - G 1 1/4	27,5 (1.0826)	G 3/8	G 1/2	G 1/8
HF 547-20.122	1,20 (2.64)	148 (5.8267)	119 (4.6850)	G 1	G 1/2 - G3/4 - G 1 1/4				
HF 547-20.201	1,40 (3.08)	229 (9.0157)	199 (7.8346)	G 1 1/4	G 1/2 - G 3/4 - G1	40 (1.5747)			
HF 547-20.280	1,70 (3.74)	312 (12.2834)	282 (11.1023)						

NPT, metric and SAE UN-UNF threads are available (consult our technical department).

01/07.2009
ICAT_021_010_HF547

ELEMENTS DIMENSIONS FOR HF547-10

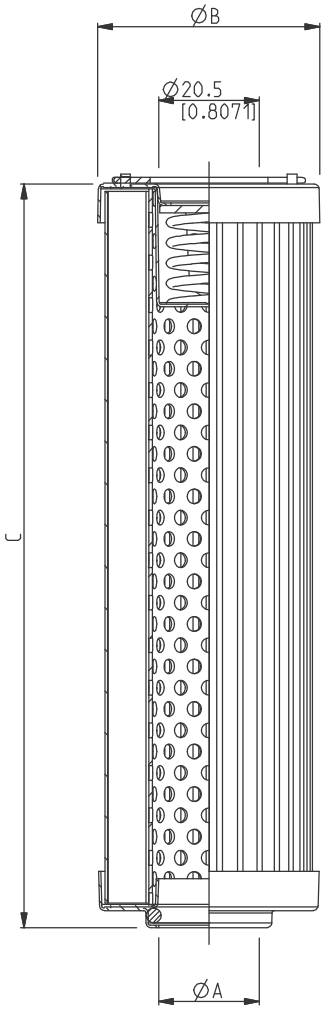

ICAT_021_003_HF547

Technical data for (FS) version elements are available on request.

Element Type	Ø A	Ø B	C	Filtering surface (AS)		
				FG	MI / MS	RP / SP
	mm (in)	mm (in)	mm (in)	cm^2 (in^2)	cm^2 (in^2)	cm^2 (in^2)
HE K02-08.095	20.5 (0.8070)	45 (1.7716)	101,5 (3.9960)	565 (87.5751)	485 (75.1751)	645 (99.9752)
HE K02-08.145			151,5 (5.9645)	860 (133.3003)	740 (114.7002)	985 (148.4903)
HE K02-08.195			201,5 (7.9330)	1160 (179.8004)	995 (154.2253)	1325 (205.3754)

01/07.2009

ELEMENTS DIMENSIONS FOR HF547-20

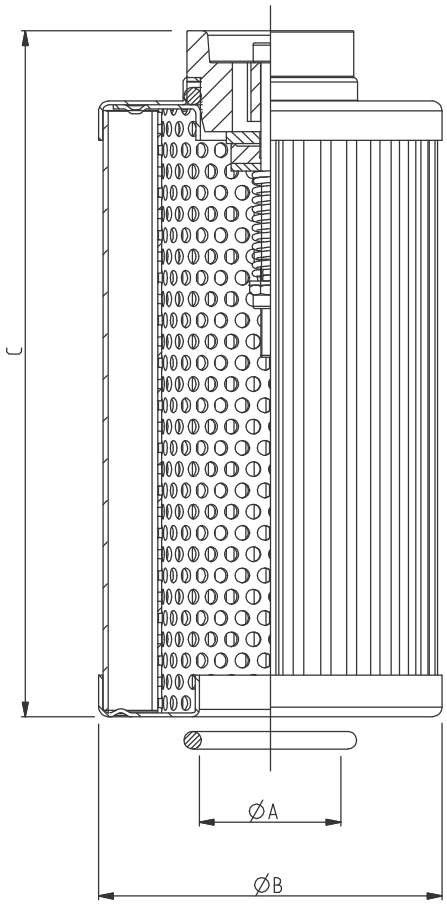

ICAT_021_004_HF547

Technical data for (FS) version elements are available on request.

Element type	Ø A	Ø B	C	Filtering surface (AS)		
				FG	MI / MS	RP / SP
	mm (in)	mm (in)	mm (in)	cm^2 (in^2)	cm^2 (in^2)	cm^2 (in^2)
HE K02-20.077	29 (1.1417)	70 (2.7558)	95 (3.7401)	700 (108.5002)	445 (68.9751)	850 (131.7503)
HE K02-20.122			140 (5.5117)	1115 (172.8253)	615 (95.3251)	1350 (209.2504)
HE K02-20.201	41 (1.6141)		219 (8.6220)	1680 (260.4005)	930 (144.1503)	2035 (315.4256)
HE K02-20.280			298 (11.7322)	2340 (362.7007)	1295 (200.7254)	2835 (439.4259)

INDICATORS

REAR MANOMETER

Code: **M**

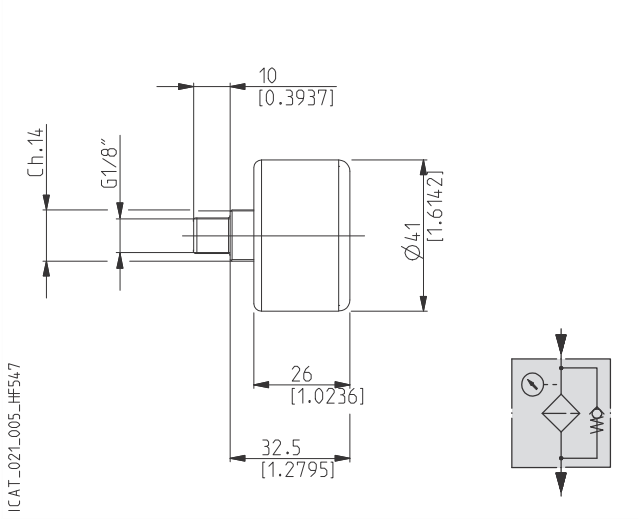

Scale	0 ÷ +145 psi (0 ÷ +10 bar)

RADIAL MANOMETER

Code: **N**

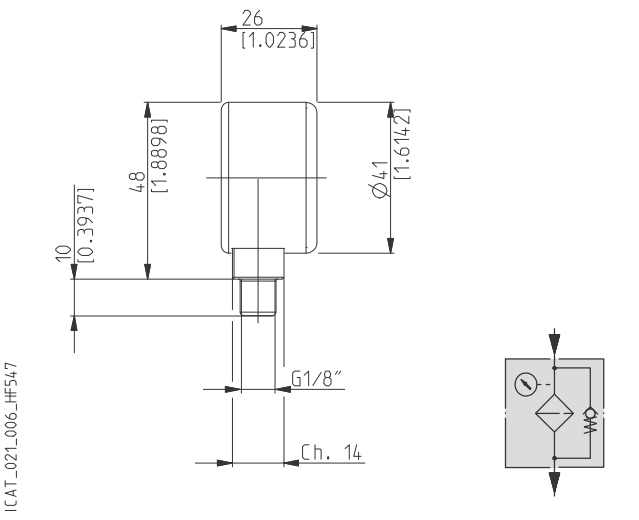

Scale	0 ÷ +145 psi (0 ÷ +10 bar)

VISUAL INDICATOR

Code: **P**

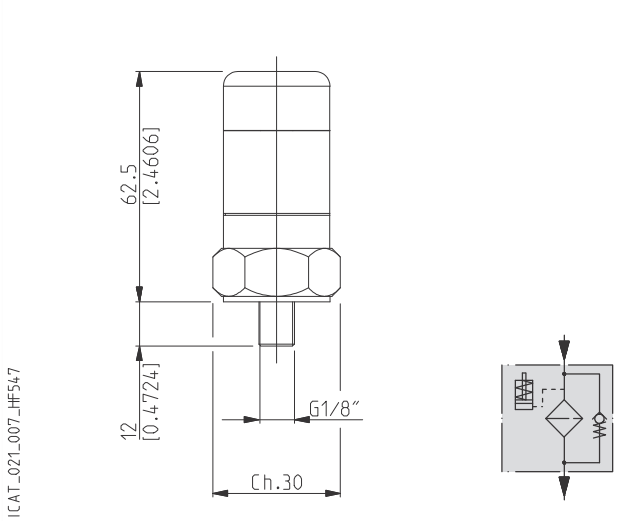

Pressure setting	21.8 psi (1,5 bar)

ELECTRICAL INDICATOR

Code: **S**

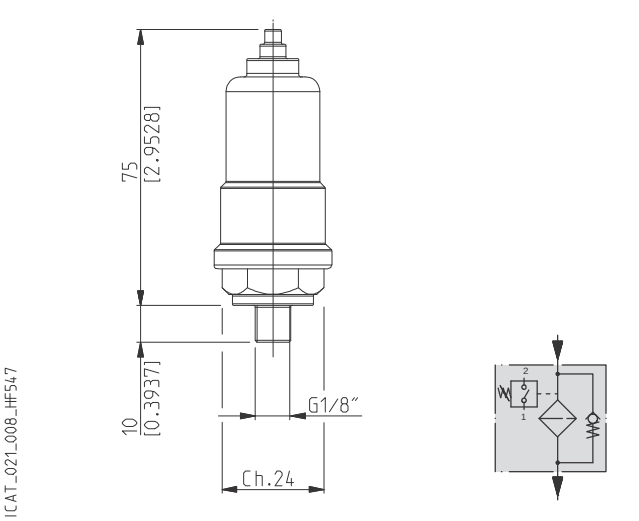

Pressure setting	21.8 psi (1,5 bar)
Max. working voltage	220 VCA
	30 VCC
Max. working current	0,5 A (resistivity)
	0,2 A (inductive)
Protection class	IP65
Contacts	N.O.contact

01/07.2009

INLET PORTS

Filter type	PORTS TYPE			
	Nominal size	Gas BSPP	NPT	SAE ODT
HF 547-10	3/8"	GC	NC	OA
	1/2"	GD	ND	OB
	3/4"	GE	NE	OD
HF 547-20	1/2"	GD	ND	OB
	3/4"	GE	NE	OD
	1"	GF	NF	OF
	1" 1/4	GG	NG	OG

GAS THREAD — BSPP

Cylindrical GAS thread (55°) in accordance with UNI - ISO 228

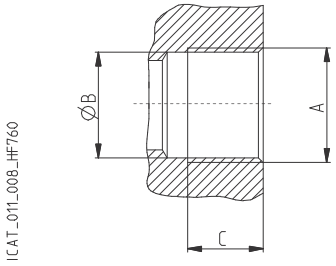

CODE	Nominal size	A	B	C	
			mm (in)	mm (in)	Nm (lbf in)
GC	3/8"	G 3/8	15 (0.5905)	14 (0.5511)	15 $^{+1}$ (133 ÷ 142)
GD	1/2"	G 1/2	19 (0.7480)	17 (0.6692)	20 $^{+1}$ (177 ÷ 186)
GE	3/4"	G 3/4	24,5 (0.9645)	20 (0.7873)	30 $^{+2,5}$ (266 ÷ 288)
GF	1"	G 1	30,5 (1.2007)	22 (0.8661)	50 $^{+2,5}$ (443 ÷ 465)
GG	1" 1/4	G 1 1/4	39 (1.5354)	24 (0.9448)	60 $^{+5}$ (531 ÷ 575)

01/07.2009

INLET PORTS

NPT THREAD — NPT

NPT thread (60°) in accordance with ANSI - ASME B1-20

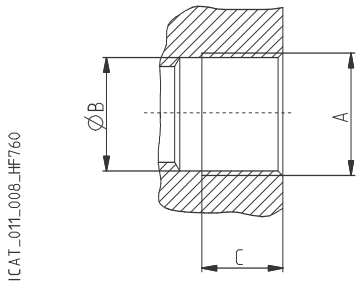

CODE	Nominal size	A	B	C	
			mm (in)	mm (in)	Nm (lbf in)
NC	3/8"	3/8 NPT	14,75 (0.5807)	10 (0.3936)	5 $^{+1}$ (44 ÷ 53)
ND	1/2"	1/2 NPT	18 (0.7086)	13 (0.5118)	10 $^{+1}$ (88 ÷ 97)
NE	3/4"	3/4 NPT	23,5 (0.9251)	14 (0.5511)	25 $^{+1}$ (221 ÷ 230)
NF	1"	1 NPT	29,5 (1.1614)	17 (0.6692)	30 $^{+2,5}$ (265 ÷ 287)
NG	1" 1/4	1 1/4 NPT	38,5 (1.5157)	18 (0.7086)	50 $^{+2,5}$ (442 ÷ 464)

SAE J514 THREAD — ODT

American thread UNC-UNF 60° in accordance with ANSI B 1.1

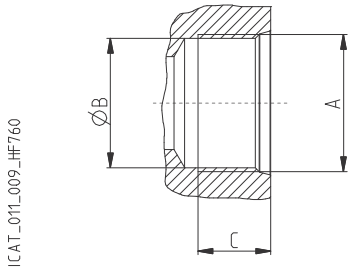

CODE	Nominal size	A	B	C	
			mm (in)	mm (in)	Nm (lbf in)
OA	3/8"	9/16" - 18 UNF- 2B	12,75 (0.5019)	12 (0.4724)	15 $^{+1}$ (133 ÷ 142)
OB	1/2"	3/4" - 16 UNF - 2B	17,3 (0.6811)	15 (0.5905)	20 $^{+1}$ (177 ÷ 186)
OD	3/4"	1 1/16" - 12 UNF - 2B	24,7 (0.9724)	20 (0.7873)	40 $^{+2,5}$ (354 ÷ 376)
OF	1"	1 5/16" - 12 UNF - 2B	30,5 (1.2007)	20 (0.7873)	60 $^{+5}$ (531 ÷ 575)
OG	1" 1/4	1 5/8" - 12 UNF - 2B	39,1 (1.5393)	20 (0.7873)	70 $^{+5}$ (620 ÷ 664)

01/07.2009

ASSEMBLY AND REPLACING ELEMENT INSTRUCTIONS

ASSEMBLY

Once you have checked the integrity of the filter inside its package, proceed as follows:

A Take off the protection cap from the inlet port.

B Ensure the filter to the tank through the flange's holes (pos.3) with a tightening torque of 44 lbf in (5 Nm).

C Connect the circuit riturn pipes to the inlet port using the tightening torque indicated on pages 19 and 20.

D Whether the filter has secondary ports, prepare the required connections.

E If the filter has a clogging indicator (pos.10 - 11 - 12 - 13), take the protection cap off and screw the indicator in the dedicated seat, then tighten to a tightening torque of 266 lbf in (30 Nm). If the indicator is electric, complete the required connections.

F Start the circuit for a few minutes.

G Make sure there are no leaks.

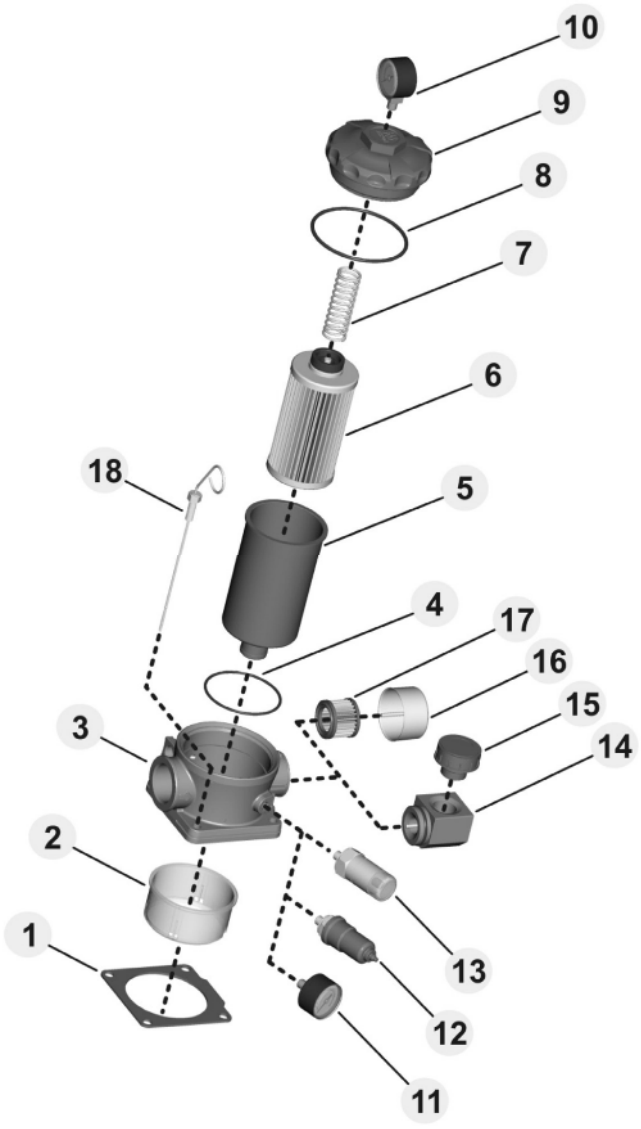

REPLACING ELEMENT

Once the working hour limit indicated in the manteinance instructions of the system is reached or when the clogging indicators point out the limit pressure drop created inside the filter, the element must be replaced. Pay attention to the drainage of hydraulic oil, therefore prepare suitable containers to collect it.

Proceed as follows:

A Stop the system in "Machine Stopped" status.

B Secure any shut-off valves on the hydraulic circuit.

C Unscrew the closure cover (pos.9).

D Remove the clogged filtering cartridge (pos.6), making sure no residual particles have settled on the bowl bottom (pos.5).

E Make sure the O-ring (pos.4 - pos.8) and the anti-extrusion ring (pos.1) are not damaged, otherwise replace them and consequently position the ones correctly.

F Insert the new filtering cartridge, lubricating the sealing O-Ring beforehand.

G Screw the cover (pos.9) making sure the threading is screwed correctly. Tighten to a tightening torque of 266 lbf in (30 Nm).

H Start the machine for a few minutes.

I Make sure there are no leaks.

Pos.	Description
1	Housing seal
2	Antisplash
3	Housing
4	Bowl O-Ring
5	Bowl
6	Filtering element
7	Spring location
8	Cover O-ring
9	Closing cover
10	Radial manometer
11	Rear manometer
12	Electrical indicator
13	Visual indicator
14	Air breather junction
15	Pressurized air breather
16	Breather protection
17	Air breather element
18	Dipstick

When ordering spare parts, always specify the reference number, the filter code and quantity.
Example: Spare parts pos. 8 - HHD20725 - Qty 3

01/07.2009

HOW TO ORDER A COMPLETE FILTER

1	2	3	4	5	6	7	8
HF547- 20.201	- AS	- FG010	- B17	- GG	- B	- S	- Z -

9	10	11	12	13	14	15
XA	- GA	- M	- YC	- GC	- O	- K

1 Filter type	CODE
See table from pag. 14 to pag. 15	HF547..

2 Filtering surface	CODE
Standard	AS
Oversize	FS

3 Degree of filtration	CODE
3 m] Micro-fibre glass	FG003
6 [m] Micro-fibre glass	FG006
10 m] Micro-fibre glass	FG010
25 [m] Micro-fibre glass	FG025
25 [m] Stainless steel	MI025
60 [m] Stainless steel	MI060
90 [m] Steel	MS090
125[m] Stainless steel	MI125
10 [m] Cellulose	SP010
25 [m] Cellulose	SP025
10 [m] Reinforced cellulose	RP010
25 [m] Reinforced cellulose	RP025

4 By-pass setting valve	CODE
With By-pass setting valve 25 [psi] (1,7 [bar])	B17
With By-pass setting valve 51 [psi] (3,5 [bar])	B35

5 Inlet port	CODE
GAS threads (BSPP)	
G 3/8	GC
G 1/2	GD
G 3/4	GE
G 1	GF
G 1 1/4	GG
NPT threads	
3/8	NC
1/2	ND
3/4	NE
1	NF
1 1/4	NG
SAE threads ODT	
3/8	OA
1/2	OB
3/4	OD
1	OF
1 1/4	OG

6 Seals	CODE
Buna	B
Viton	V

7 Air breather	CODE
Without	C
With breather and filter 10 [m]	S
With breather and filter 40 [m]	U
With pressurized breather 4.4 psi (0,3 bar) and filter 40 [m]	J
With pressurized breather 4.4 psi (0,3 bar), pressurized suction -0.4 psi (0,03 bar) and filter 40 [m]	W

8 Magnetic set	CODE
Without	Z
With magnetic set	R

9 Indicators arranged	CODE
Without	XN
On the housing - right (1)	XA
On the housing - left (2)	XB
On the cover (3)	XD

10 Indicators' ports dimensions	CODE
GAS thread (BSPP)	
G1/8	GA
G 1/8 with plug	DA

11 Indicators	CODE
Without	G
Manometer - rear connection	M
Manometer - radial connection	N
Visual indicator	P
Electrical indicator	S

12 Secondary ports	CODE
Without	YN
On the housing - right (1)	YA
On the housing - left (2)	YB
On the housing - right (4) (only for HF547-20)	YC

13 Secondary ports dimensions	CODE
G 1/4	GB
G 3/8 (only for HF547-20)	GC
G 1/2 (only for HF547-20)	GD

14 Antisplash	CODE
Without	O
With antisplash	A

15 Accessories	CODE
Without	K
With bowl extension (ex. bowl extension lenght 150=P150)	P...
With level dipstick (ex. level dipstick lenght 175=L175)	L...

On request steel bowls for HF547-20 serie are available.

Standard On request

01/07.2009

HOW TO ORDER A REPLACEMENT ELEMENT

1		2		3		4		5		6
HEK02-	20.201	-	AS	-	FG010	-	VM	-	B17	-	B

1	Element type	CODE
	See table from pag. 16 to pag. 17	HE K02..

2	Filtering surface	CODE
	Standard	AS
	Oversize	FS

3	Degree of filtration	CODE
	3 m] Micro-fibre glass	FG003
	6 [m] Micro-fibre glass	FG006
	10 m] Micro-fibre glass	FG010
	25 [m] Micro-fibre glass	FG025
	25 [m] Stainless steel	MI025
	60 [m] Stainless steel	MI060
	90 [m] Steel	MS090
	125[m] Stainless steel	MI125
	10 [m] Cellulose	SP010
	25 [m] Cellulose	SP025
	10 [m] Reinforced cellulose	RP010
	25 [m] Reinforced cellulose	RP025

4	By-pass valve	CODE
	With valve and spring	VM
	With valve - without spring	VV

5	By-pass setting valve	CODE
	With By-pass setting 25 [psi] (1,7 [bar])	B17
	With By-pass setting 51 [psi] (3,5 [bar])	B35

6	Seals	CODE
	Buna	B
	Viton	V

Standard

On request

01/07.2009

TANK MOUNTED RETURN LINE FILTERS SERIES HF 550

Replaces: HF 550 03 T E

The tank mounted filters HF 550 series are specifically designed to be directly connected on the hydraulic circuits return line and provide versatility to safeguard the circuit components from contaminating particles.

ADJUSTABLE SETTING BY-PASS VALVE - EXTRACTIBLE AND REUSABLE

OVERSIZE FILTERING SURFACES

MULTILAYER SYSTEM

FILLER CAP

COMPLETE FILTER		
MATERIALS	Cover	Reinforced nylon - Aluminium
	Housing	Aluminium
	Bowl	Reinforced nylon - Steel
	Seals	Buna - Viton
FLUID COMPATIBILITY CONFORMING TO ISO 2943	With reference to ISO 6743/4	With fluid (HH-HL-HM-HR-HV-HG), and water emulsion (HFAE-HFAS) use filters with Buna seals. With water - glycol (HFC) ask for anodizing treatment.
		With synthetic fluid (HS-HFDR-HFDU-HFDS) use filters with Viton seals.
FLOW RANGE	min.	20 [l/min]
	max.	600 [l/min]
MAX. WORKING PRESSURE		800 [kPa] 8 bar
TESTING PRESSURE		1200 [kPa] 12 bar
BURST PRESSURE		1600 [kPa] 16 bar
OPERATING TEMPERATURE	With Buna seals	- 20 + 80 [°C]
	With Viton seals	- 20 + 110 [°C]
FILTER ELEMENTS		
MATERIALS	End cap - Inner tube	Zinc plated steel
	Filter media	Steel - Stainless steel
		Phospor bronze
		Cellulose - Reinforced cellulose
		Micro-fibre glass
REMOVAL RATING		Conforming to ISO 16889
ELEMENT COLLAPSE PRESSURE RATING	Conforming to ISO 2941	1000 [kPa] 10 bar

Edition: 04/09.2001

TECHNICAL DATA

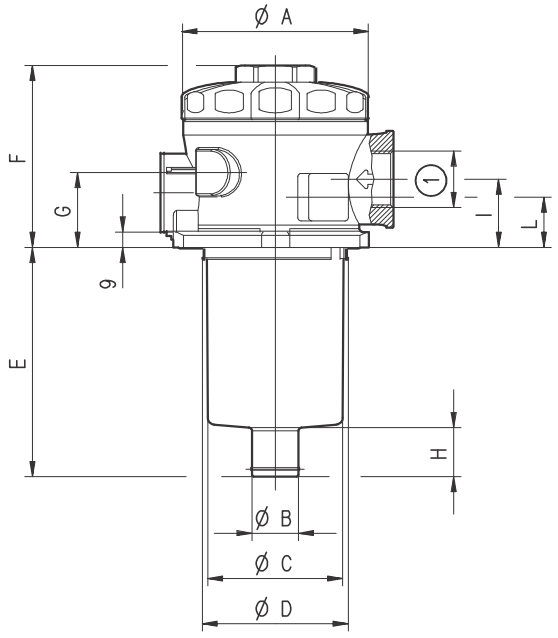

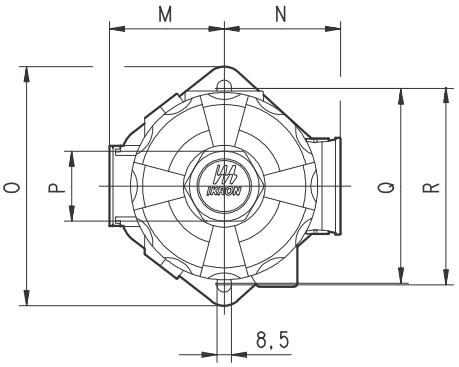

DI03-D01/0901

RESERVOIR MOUNTING HOLE DIMENSIONS

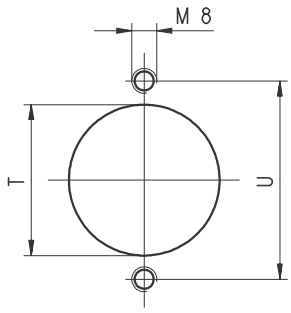

Filter type	T	U
	mm	mm
HF 550-10.060	68	89 [1]
HF 550-10.129		
HF 550-20.077	87	115 [1]
HF 550-20.122		
HF 550-20.201		

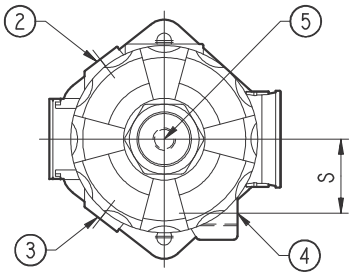

MANO-VACUM METER

M
N

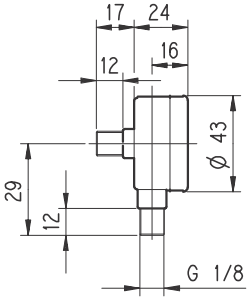

DI03-D04/0501

VISUAL INDICATOR

P

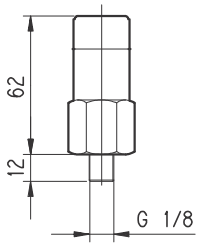

ELECTRICAL INDICATOR

S
T

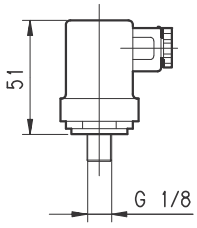

Filter type	Ø A	Ø B	Ø C	Ø D	E	F	G	H	I	L	M	N	O	P	Q	R	S
	mm	mm	mm	mm	mm	mm	mm	mm	mm	mm	mm	mm	mm	mm	mm	mm	mm
HF 550-10.060	84	24	62	67	79,5	81	30	22	25	-	55	54	107	32	88	90	-
HF 550-10.129					148,5												
HF 550-20.077	110	27,4	80,5	86	103	107	44	27	40	30	67,5	68,5	140,5	41	114	116	44
HF 550-20.122					148												
HF 550-20.201		40			229			29									

Filter type	(GAS - BSPP)		(GAS - BSPP) Secondary inlet	(GAS - BSPP) Indicators	
	Standard ( )	On request ( )	Standard ( )	Standard	On request
HF 550-10.060	G 1/2	G 3/8 - G 3/4	Not available	G 1/8	G 1/4
HF 550-10.129	G 3/4	G 3/8 - G 1/2			
HF 550-20.077	G 3/4	G 1/2 - G 1 - G 1 1/4	G 3/8 - G 1/2	G 1/8	G 1/4
HF 550-20.122	G 1	G 1/2 - G 3/4 - G 1 1/4			
HF 550-20.201	G 1 1/4	G 3/4 - G 1			

( ) NPT, metric and SAE UN-UNF threads are available (consult our technical department).

Replaces: 03/05.01

Di03-002 - 04/09.01

TECHNICAL DATA

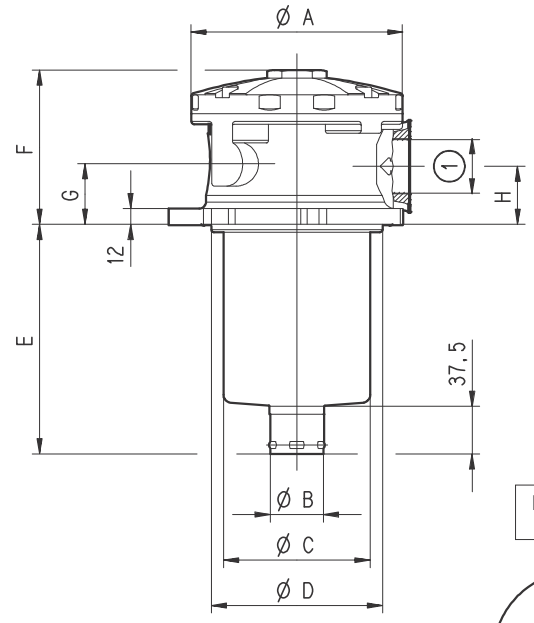

HF 550-30...

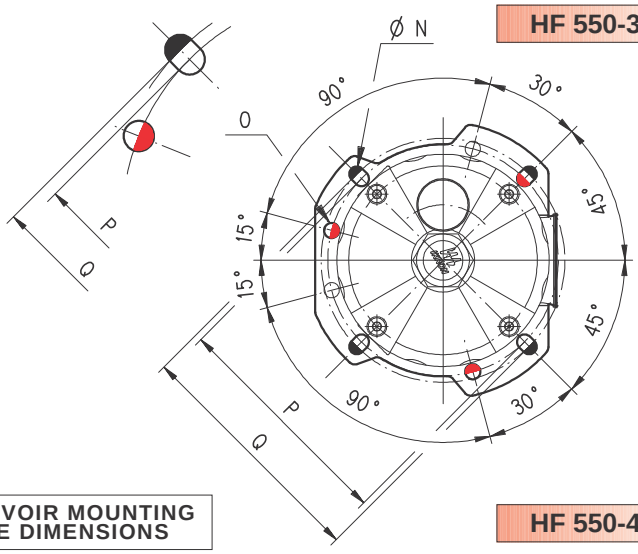

RESERVOIR MOUNTING HOLE DIMENSIONS

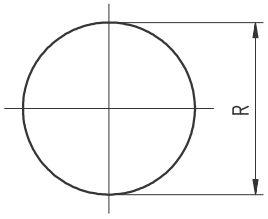

HF 550-40...

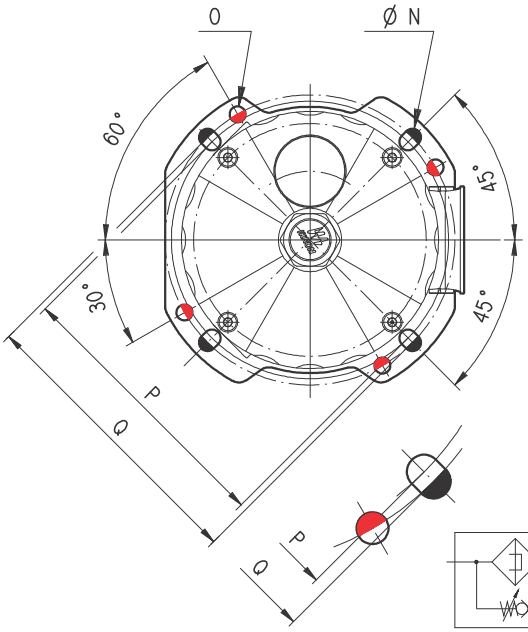

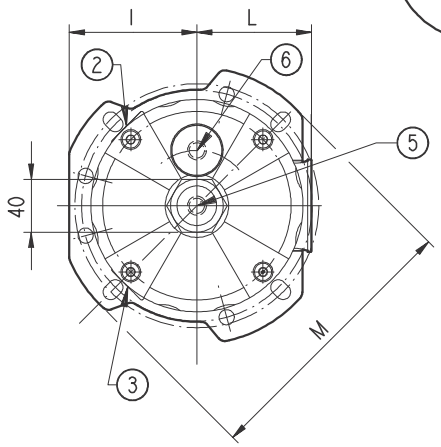

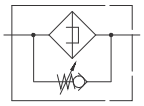

DI03-D02/0901

Filter type	Ø A	Ø B	Ø C	Ø D	E	F	G	H	I	L	M	Ø N	O	P	Q	R
	mm	mm	mm	mm	mm	mm	mm	mm	mm	mm	mm	mm	mm	mm	mm	mm
HF 550-30.162	160,5	40,5	111	130	225,5	116	46	44	97,5	87	210	12	12	175	185	131
HF 550-30.195																
HF 550-30.239					269,5											
HF 550-40.162	194,5	64	143,5	174	225,5	133,5	51	49	110	117	244	13	12,5	215	220	175
HF 550-40.194		50,5														
HF 550-40.195		64														
HF 550-40.239																

Filter type	(GAS - BSPP)		Secondary inlet	Indicators		Filler cap
	Standard ( )	On request ( )	Standard ( )	Standard	On request	
HF 550-30.162	G 1 1/4	G 1 - G 1 1/2	G 3/8 - G 1/2 - G 3/4	G 1/8	G 1/4	G 3/4
HF 550-30.195						
HF 550-30.239	G 1 1/2	G 1 - G 1 1/4				
HF 550-40.162	G 1 1/2	G 2	G 3/8 - G 1/2 - G 3/4	G 1/8	G 1/4	G 1 1/4
HF 550-40.194						
HF 550-40.195						
HF 550-40.239	G 2	G 1 1/2				

( ) NPT, metric and SAE UN-UNF threads are available (consult our technical department).

Replaces: 03/05.01
Di03-002 - 04/09.01

HOW TO ORDER A COMPLETE FILTER

1	2	3	4	5	6	7
HF550-20.077	- AS	- FB060	- B17	- GE	- B	H

8	9	10	11	12	13
Z	- XA	- GA	- M	- YB	- GC

1 Filter type	CODE
See table page 2 and 3	HF550-...
2 Filtering Surface	**CODE**
Standard	AS
Oversize (on request)	FS
Multilayer (on request)	MS
3 Degree of filtration	**CODE**
3 m] Micro-fibre glass	FG003
6 m] Micro-fibre glass	FG006
10 m] Micro-fibre glass	FG010
25 m] Micro-fibre glass	FG025
60 m] Phospor bronze	FB060
125 [m] Phospor bronze	FB125
90 [m] Steel wire mesh	MS090
25 [m] Stainless steel mesh	MI025
10 [m] Cellulose	SP010
25 [m] Cellulose	SP025
10 [m] Reinforced cellulose	RP010
25 [m] Reinforced cellulose	RP025
4 By-pass valve	**CODE**
Setting 170 [kPa]; 1,7 [bar]	B17
Setting 210 [kPa]; 2,1 [bar]	B21
Setting 350 [kPa]; 3,5 [bar]	B35

5 Inlet port	CODE
Thread GAS (BSPP)	
G 3/8	GC
G 1/2	GD
G 3/4	GE
G 1	GF
G 1 1/4	GG
G 1 1/2	GH
G 2	GL
6 Seals	**CODE**
Buna	B
Viton	V
7 Filler cap	**CODE**
Without	H
With filler cap - only for HF 550-30 and HF 550-40	L
8 Magnetic set	**CODE**
Without	Z
With magnetic set	R
9 Indicators arrang.	**CODE**
Without	XN
On the housing - right side	XA
On the housing - left side	XB
On the cover	XD

10 Dim. indicat. ports	CODE
Thread GAS (BSPP)	
G 1/8	GA
G 1/8 WITH PLUG	DA
G 1/4	GB
G 1/4 WITH PLUG	DB
11 Indicators	**CODE**
Without	G
Mano-vacuum meter rear conn.	M
Mano-vacuum meter rad. conn.	N
Visual indicator	P
Electrical indicator	S
12 Secondary ports	**CODE**
Without	YN
On the housing - right side	YA
On the housing - left side	YB
On the housing - left side	YC
13 Dim. Secon. ports	**CODE**
Thread GAS (BSPP)	
See pages 2 - 3 and table ref. 5	G..

Standard

On request

Note: On request steel bowl is available for HF550-10 and HF550-20.

FILTERING ELEMENTS - TECHNICAL DATA

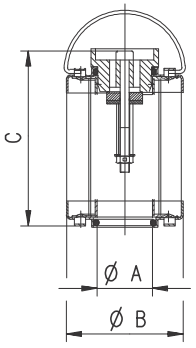

DI03-D05/0501

Element type	Ø A	Ø B	C	Standard filtering surface		
	mm	mm	mm	cm²		
				FG	FB	SP / RP
HE K05-10.060	24,6	52	79,4	345	225	400
HE K05-10.129			148,4	745	490	860
HE K05-20.077	28,8	70	100,3	700	445	850
HE K05-20.122			145,3	1115	615	1350
HE K05-20.201	41,4		225,3	1680	930	2035
HE K05-30.162	41,4	99	184,8	2590	1700	3000
HE K05-30.195			217,8	3705	2050	4485
HE K05-30.239			261,8	4540	2510	5500
HE K05-40.162	65	130	184,8	5075	2625	5335
HE K05-40.194	51		217,8	6110	3160	6425
HE K05-40.195	65		217,8			
HE K05-40.239			261,8	9035	4390	7875

HOW TO ORDER A REPLACEMENT ELEMENT

1	2	3	4	5	6
HE K05-10.060	- AS	- FG025	- VM	- B17	- B

1 Element type	CODE
See table	HE K05..
2 Filtering surface	**CODE**
See table ref. 2	
3 Degree of filtration	**CODE**
See table ref. 3	

4 By-pass valve	CODE
With valve and spring	VM
With valve - without spring	VV
Without valve - without spring	OO
5 Setting valve	**CODE**
See table ref. 4	

6 Seals	CODE
See table ref. 6	

Table how to order a complete filter.

Replaces: 02/02.00

Di03-002 - 03/05.01

TANK MOUNTED RETURN LINE FILTERS SERIES HF 554

Replaces: HF 554 02 T E

The tank mounted filters HF 554 series are specifically designed to be directly connected on the hydraulic circuits return line and provide versatility to safeguard the circuit components from contaminating particles.

ADJUSTABLE SETTING BY-PASS VALVE - EXTRACTIBLE AND REUSABLE

OVERSIZE FILTERING SURFACES

MULTILAYER SYSTEM

AIR BREATHER

COMPLETE FILTER		
MATERIALS	Cover	Reinforced nylon
	Housing	Anodized aluminum
	Bowl	Reinforced nylon - Steel
	Seals	Buna - Viton
FLUID COMPATIBILITY CONFORMING TO ISO 2943	With reference to ISO 6743/4	With fluid (HH-HL-HM-HR-HV-HG), and water emulsion (HFAE-HFAS) use filters with Buna seals. With water - glycol (HFC) ask for anodizing treatment.
		With synthetic fluid (HS-HFDR-HFDU-HFDS) use filters with Viton seals.
FLOW RANGE	min.	20 [l/min]
	max.	150 [l/min]
MAX. WORKING PRESSURE		800 [kPa] 8 bar
TESTING PRESSURE		1200 [kPa] 12 bar
BURST PRESSURE		1600 [kPa] 16 bar
OPERATING TEMPERATURE	With Buna seals	- 20 + 80 [°C]
	With Viton seals	- 20 + 110 [°C]
FILTER ELEMENTS		
MATERIALS	End cap - Inner tube	Zinc plated steel - Reinforced nylon
	Filter media	Micro-fibre glass
		Phospor bronze
		Steel - Stainless steel
		Cellulose - Reinforced cellulose
REMOVAL RATING		Conforming to ISO 16889
ELEMENT COLLAPSE PRESSURE RATING	Conforming to ISO 2941	1000 [kPa] 10 bar

Edition: 03/09.2001

TECHNICAL DATA

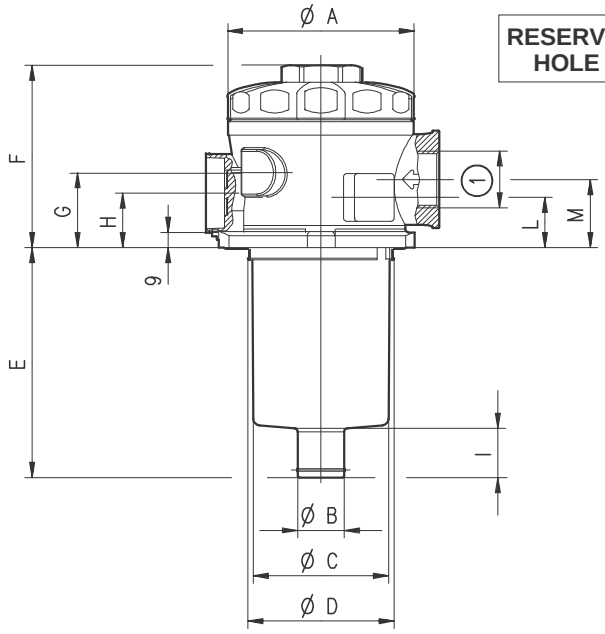

RESERVOIR MOUNTING HOLE DIMENSIONS

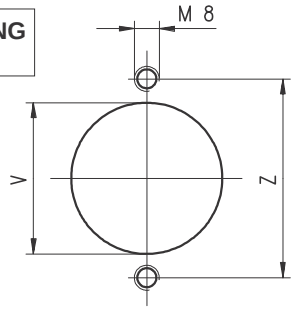

Filter type	V	Z
	mm	mm
HF 554-10.060	68	89 [1]
HF 554-10.129		
HF 554-20.077	87	115 [1]
HF 554-20.122		
HF 554-20.201		

DI07-D01/0901

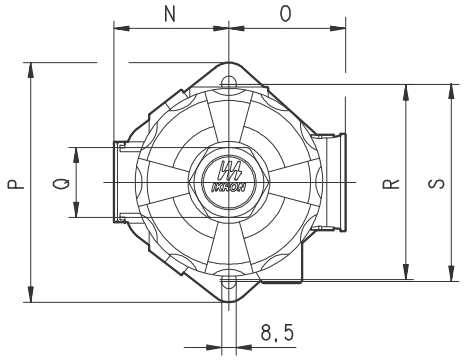

AIR BREATHER VERSION

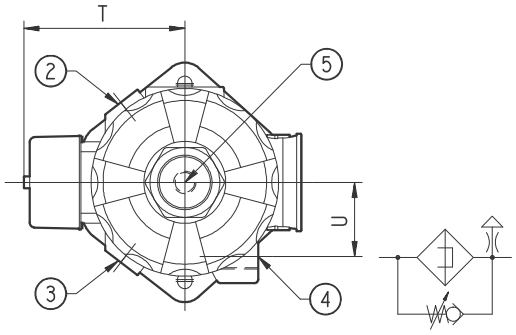

MANO-VACUM METER

M
N

DI07-D02/0501

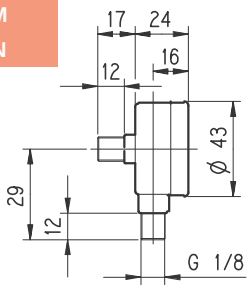

VISUAL INDICATOR

P

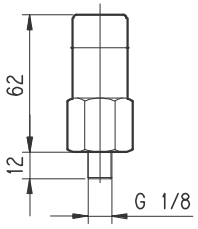

ELECTRICAL INDICATOR

S
T

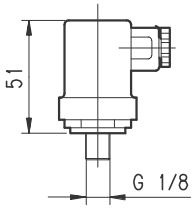

Filter type	Ø A	Ø B	Ø C	Ø D	E	F	G	H	I	L	M	N	O	P	Q	R	S	T	U
	mm	mm	mm	mm	mm	mm	mm	mm	mm		mm	mm	mm	mm	mm	mm	mm	mm	mm
HF 554-10.060	84	24	62	67	79,5	81	30	22	22	-	25	55	54	107	32	88	90	73,5	-
HF 554-10.129					148,5														
HF 554-20.077	110	27,4	80,5	86	103	107	44	32	27	30	40	67,5	68,5	140,5	41	114	116	94,5	44
HF 554-20.122					148														
HF 554-20.201		40			229				29										

Filter type	(GAS - BSPP)		(GAS - BSPP) Secondary inlet	(GAS - BSPP) Indicators	
	Standard ( )	On request ( )	Standard ( )	Standard	On request
HF 554-10.060	G 1/2	G 3/8 - G 3/4	Not available	G 1/8	G 1/4
HF 554-10.129	G 3/4	G 3/8 - G 1/2			
HF 554-20.077	G 3/4	G 1/2 - G 1 - G 1 1/4	G 3/8 - G 1/2	G 1/8	G 1/4
HF 554-20.122	G 1	G 1/2 - G 3/4 - G 1 1/4			
HF 554-20.201	G 1 1/4	G 3/4 - G 1			

( ) NPT, metric and SAE UN-UNF threads are available (consult our technical department).

Replaces: 02/05.01

Di07-002 - 03/09.01

HOW TO ORDER A COMPLETE FILTER

1		2		3		4		5		6		7
HF554-20.201	-	AS	-	FB060	-	B17	-	GG	-	B		C

8		9		10		11		12		13
Z	-	XA	-	GA	-	M	-	YC	-	GC

1	Filter type	CODE
See table page 2		HF554-...
2	**Filtering surface**	**CODE**
Standard		AS
Oversize (on request)		FS
Multilayer (on request)		MS
3	**Degree of filtration**	**CODE**
3	m] Micro-fibre glass	FG003
6	m] Micro-fibre glass	FG006
10	m] Micro-fibre glass	FG010
25	m] Micro-fibre glass	FG025
60	m] Phospor bronze	FB060
125	[m] Phospor bronze	FB125
90	[m] Steel wire mesh	MS090
25	[m] Stainless steel wire mesh	MI025
10	[m] Cellulose	SP010
25	[m] Cellulose	SP025
10	[m] Reinforced cellulose	RP010
25	[m] Reinforced cellulose	RP025
4	**By-pass setting valve**	**CODE**
With By-pass valve setting 170 [kPa]; 1,7 [bar]		B17
With By-pass valve setting 210 [kPa]; 2,1 [bar]		B21
With By-pass valve setting 350 [kPa]; 3,5 [bar]		B35
5	**Inlet port**	**CODE**
Thread GAS (BSPP)		
G 3/8		GC
G 1/2		GD
G 3/4		GE
G 1		GF
G 1 1/4		GG
6	**Seals**	**CODE**
Buna		B
Viton		V

7	Air breather	CODE
Without		C
With breather 10 [m]		S
With breather 40 [m]		U
8	**Magnetic set**	**CODE**
Without		Z
With magnetic set		R
9	**Indicators arrang.**	**CODE**
Without		XN
On the housing - right		XA
On the housing - left		XB
On the cover		XD
10	**Dim. indicat. ports**	**CODE**
Thread GAS (BSPP)		
G 1/8		GA
G 1/8 WITH PLUG		DA
G 1/4		GB
G 1/4 WITH PLUG		DB
11	**Indicators**	**CODE**
Without		G
Mano-vacuum meter - rear connection		M
Mano-vacuum meter - radial connection		N
Visual indicator		P
Electrical indicator		S
12	**Secondary ports**	**CODE**
Without		YN
On the housing - right		YA
On the housing - left		YB
On the housing - front, left		YC
13	**Dim. Secon. ports**	**CODE**
Thread GAS (BSPP)		
See page 2 and table ref. 5		G..

Standard

On request

Note: On request steel bowl is available.

Replaces: 06.98

Di07-002 - 02/05.01

FILTERING ELEMENTS - TECHNICAL DATA

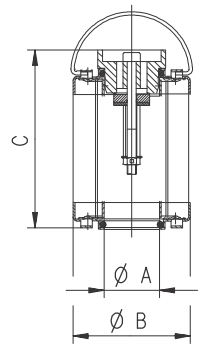

DI07-D04/0501

Element type	Ø A	Ø B	C	Standard filtering surface		
	mm	mm	mm	cm^2		
				FG	FB	SP / RP
HE K05-10.060	24,6	52	79,4	345	225	400
HE K05-10.129			148,4	745	490	860
HE K05-20.077	28,8	70	100,3	700	445	850
HE K05-20.122			145,3	1115	615	1350
HE K05-20.201	41,4		225,3	1680	930	2035

HOW TO ORDER A REPLACEMENT ELEMENT

1		2		3		4		5		6
HE K05-10.060	-	AS	-	FG025	-	VM	-	B17	-	B

1	Element type	CODE
See table		HE K05..
2	**Filtering surface**	**CODE**
Standard		AS
Oversize (on request)		FS
Multilayer (on request)		MS
3	**Degree of filtration**	**CODE**
3	m] Micro-fibre glass	FG003
6	m] Micro-fibre glass	FG006
10	m] Micro-fibre glass	FG010
25	m] Micro-fibre glass	FG025
60	m] Phospor bronze	FB060
125	[m] Phospor bronze	FB125
90	[m] Steel wire mesh	MS090
25	[m] Stainless steel wire mesh	MI025
10	[m] Cellulose	SP010
25	[m] Cellulose	SP025
10	[m] Reinforced cellulose	RP010
25	[m] Reinforced cellulose	RP025

4	By-pass valve	CODE
With valve and spring		VM
With valve - without spring		VV
Without valve - without spring		OO
5	**By-pass setting valve**	**CODE**
With By-pass setting 170 [kPa]; 1,7 [bar]		B17
With By-pass setting 210 [kPa]; 2,1 [bar]		B21
With By-pass setting 350 [kPa]; 3,5 [bar]		B35
6	**Seals**	**CODE**
Buna		B
Viton		V

Standard

On request

Replaces: 06.98

Di07-002 - 02/05.01

TANK MOUNTED RETURN LINE FILTERS
SERIES HF 570-575

Replaces: 02/04.2000

The tank mounted filters HF 570 and HF 575 series are specifically designed to be directly connected on the hydraulic return line and provide versatility to safeguard the circuit components from contaminating particles.

INSIDE-TO-OUTSIDE DIRECTION OF FLOW FILTRATION

FULL FLOW MAGNETIC PRE-FILTRATION ON THE HYDRAULIC RETURN LINE

FILLER CAP

COMPLETE FILTER		
MATERIALS	Cover	Reinforced nylon - Aluminum
	Housing	Aluminum
	Bowl - Diffusor	Steel
	Seals	Buna - Viton
FLUID COMPATIBILITY CONFORMING TO ISO 2943	With reference to ISO 6743/4	With fluid (HH-HL-HM-HR-HV-HG), and water emulsion (HFAE-HFAS) use filters with Buna seals. With water - glycol (HFC) ask for anodizing treatment.
		With synthetic fluid (HS-HFDR-HFDU-HFDS) use filters with Viton seals.
FLOW RANGE	min.	40 [l/min]
	max.	500 [l/min]
MAX. WORKING PRESSURE		800 [kPa] 8 bar
TESTING PRESSURE		1200 [kPa] 12 bar
BURST PRESSURE		1600 [kPa] 16 bar
OPERATING TEMPERATURE	With Buna seals	- 30 + 80 [°C]
	With Viton seals	- 20 + 110 [°C]
FILTER ELEMENTS		
MATERIALS	End cap - External inner tube	Zinc plated steel
	Filter media	Stainless steel
		Cellulose
		Micro-fibre glass
REMOVAL RATING		Conforming to ISO 16889
ELEMENT COLLAPSE PRESSURE RATING	Conforming to ISO 2941	1000 [kPa] 10 bar

Edition: 02/09.2001

TECHNICAL DATA HF 570-20

HF 570-20...

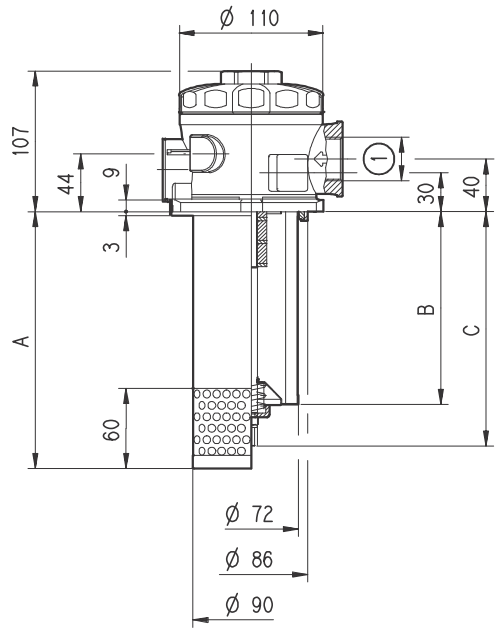

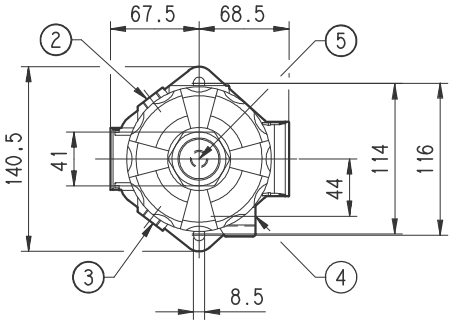

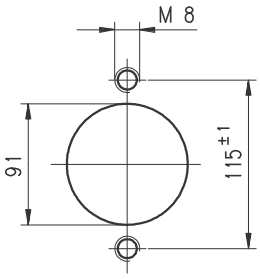

TANK MOUNTING HOLE DIMENSIONS

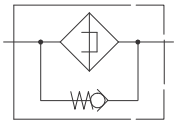

DI10-D01/0901

Replaces: 02/04.00

Filter type	A	B	C	(GAS - BSPP)		Secondary inlet	Indicators	
	mm	mm	mm	Standard ( )	On request ( )	Standard ( )	Standard	On request
HF 570-20.105	195	102	133	G 3/4	G 1/2 - G 1 G 1 1/4	G 3/8 G 1/2	G 1/8	G 1/4
HF 570-20.150		147	178	G 1	G 1/2 - G 3/4 G 1 1/4			
HF 570-20.200	345	197	228					
HF 570-20.300		297	328	G 1 1/4	G 1/2 - G 3/4 G 1			

( ) NPT, metric and SAE UN-UNF threads are available (consult our technical department).

Di10-002 - 02/09.01

TECHNICAL DATA HF 570-30

HF 570-30...

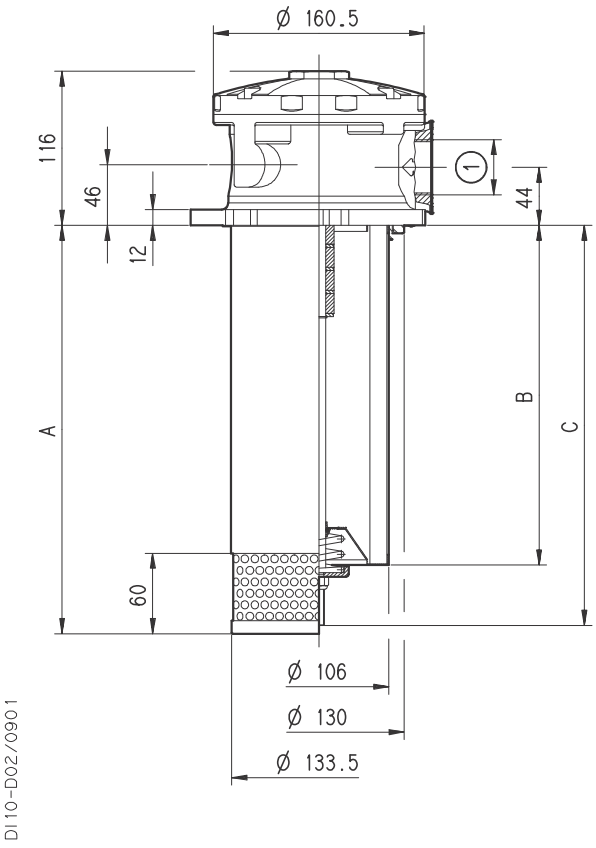

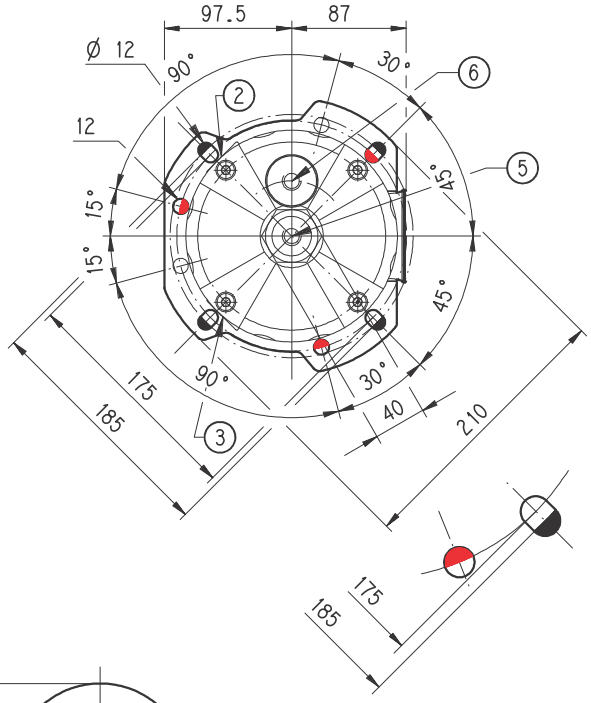

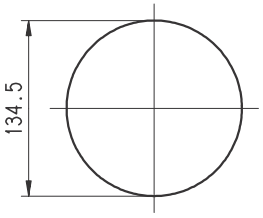

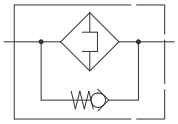

TANK MOUNTING HOLE DIMENSIONS

Filter type	A	B	C	(GAS - BSPP)		Secondary inlet	Indicators		Filler cap
	mm	mm	mm	Standard ( )	On request ( )	Standard ( )	Standard	On request	
HF 570-30.190	310	188	233	G 1 1/4	G 1 - G 1 1/2	G 3/8 G 1/2 G 3/4	G 1/8	G 1/4	G 3/4
HF 570-30.260		258	303	G 1 1/2	G 1 - G 1 1/4				
HF 570-30.465	515	463	508						

( ) NPT, metric and SAE UN-UNF threads are available (consult our technical department).

TECHNICAL DATA HF 570-40

HF 570-40...

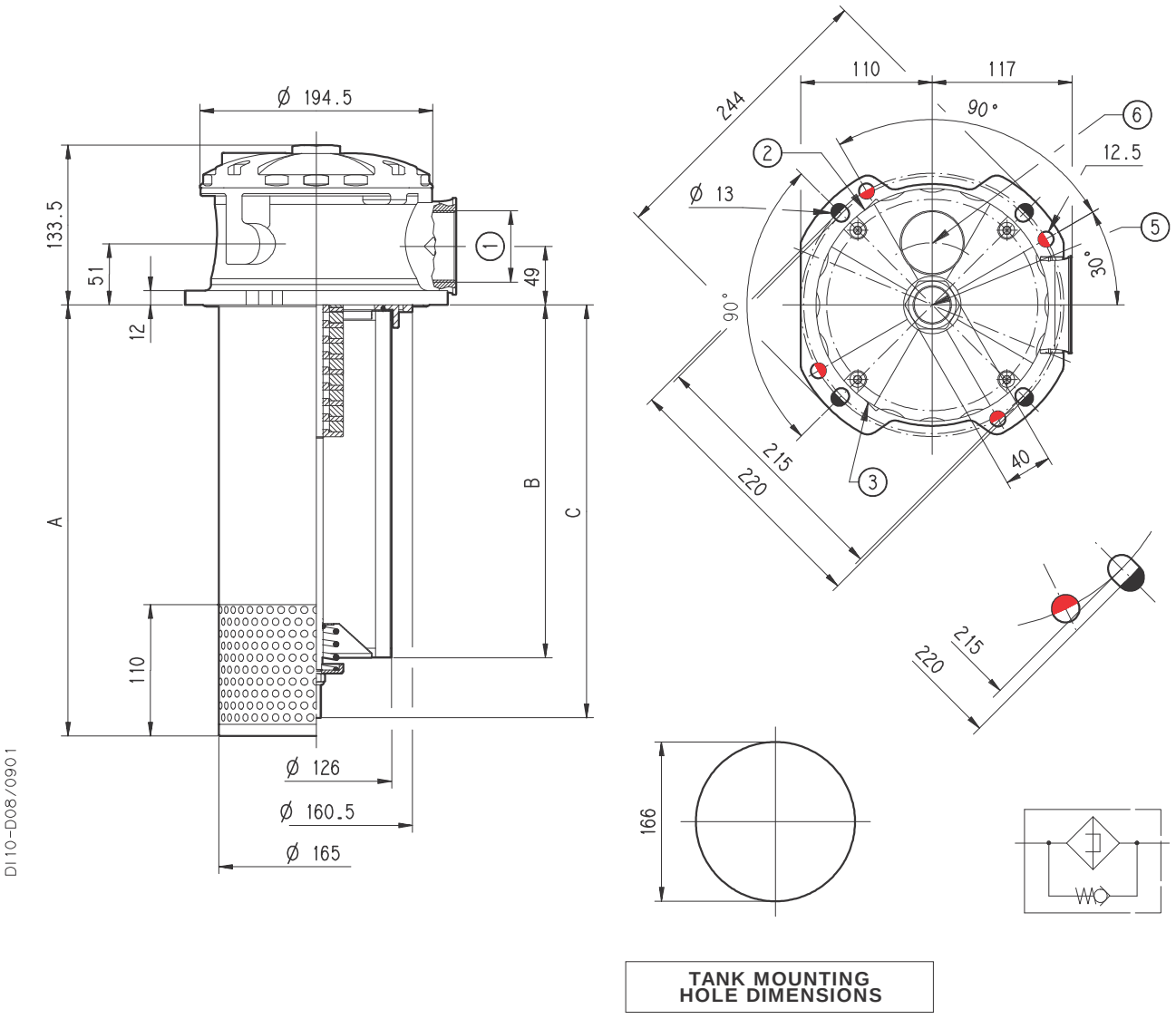

TANK MOUNTING HOLE DIMENSIONS

Filter type	A	B	C	(GAS - BSPP)		Secondary inlet	Indicators		Filler cap
	mm	mm	mm	Standard ( )	On request ( )	Standard ( )	Standard	On request	
HF 570-40.210	360	215	265	G 1 1/2	G 2	G 3/8 G 1/2 G 3/4	G 1/8	G 1/4	G 1 1/4
HF 570-40.290		295	345						
HF 570-40.390	550	395	445	G 2	G 1 1/2				
HF 570-40.480		485	535						

( ) NPT, metric and SAE UN-UNF threads are available (consult our technical department).

Replaces: 02/04.00

Di10-002 - 02/09.01

PRESSURE/VACUUM GAUGE

M
N

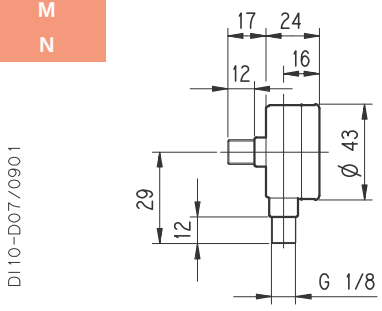

VISUAL INDICATOR

P

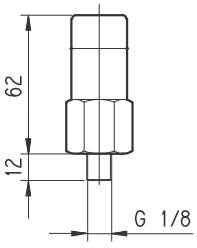

ELECTRICAL INDICATOR

S
T

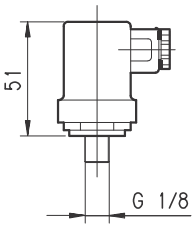

HOW TO ORDER A COMPLETE FILTER HF 570

1		2		3		4		5		6		7
HF570-20.105	-	AS	-	FG010	-	B17	-	GE	-	B	-	H
8		**9**		**10**		**11**		**12**		**13**		**14**
R	-	XA	-	GA	-	M	-	YB	-	GC	-	C

1	Filter type	CODE
See table page 2, 3 e 4		HF570-...
2	**Filtering surface**	**CODE**
Standard		AS
3	**Degree of filtration**	**CODE**
10 m] Micro-fibre glass		FG010
25 [m] Micro-fibre glass		FG025
60 m] Stainless steel mesh		MI060
10 [m] Cellulose		SP010
25 [m] Cellulose		SP025
4	**By-pass valve**	**CODE**
Setting 80 [kPa]; 0,8 [bar]		B08
Setting 170 [kPa]; 1,7 [bar]		B17
5	**Inlet port**	**CODE**
Thread GAS (BSPP)		
G 1/2		GD
G 3/4		GE
G 1		GF
G 1 1/4		GG
G 1 1/2		GH
G 2		GL

6	Seals	CODE
Buna		B
Viton		V
7	**Filler cap**	**CODE**
None		H
With filler cap (only HF 570-30 and HF 570-40)		L
8	**Magnetic set**	**CODE**
With magnetic set		R
None		Z
9	**Indicators arrang.**	**CODE**
None		XN
On the housing - right side		XA
On the housing - left side		XB
On the cover		XD
10	**Dim. indicat. ports**	**CODE**
Thread GAS (BSPP)		
G 1/8		GA
G 1/8 with plug		DA
G 1/4		GB
G 1/4 with plug		DB

11	Indicators	CODE
None		G
Pressure/vac. gauge rear conn.		M
Pressure/vac. gauge rad. conn.		N
Visual indicator		P
Electrical indicator		S
12	**Secondary ports**	**CODE**
None		YN
On the housing - right side		YA
On the housing - left side		YB
On the hous. - front-left side		YC
13	**Dim. Secon. ports**	**CODE**
Thread GAS (BSPP)		
G 3/8		GC
G 1/2		GD
G 3/4 (only HF 570-30 and HF 570-40)		GE
14	**Diffusor**	**CODE**
None		C
With diffusor		D

Standard

On request

TECHNICAL DATA HF 575

TANK MOUNTING HOLE DIMENSIONS

MOUNTING

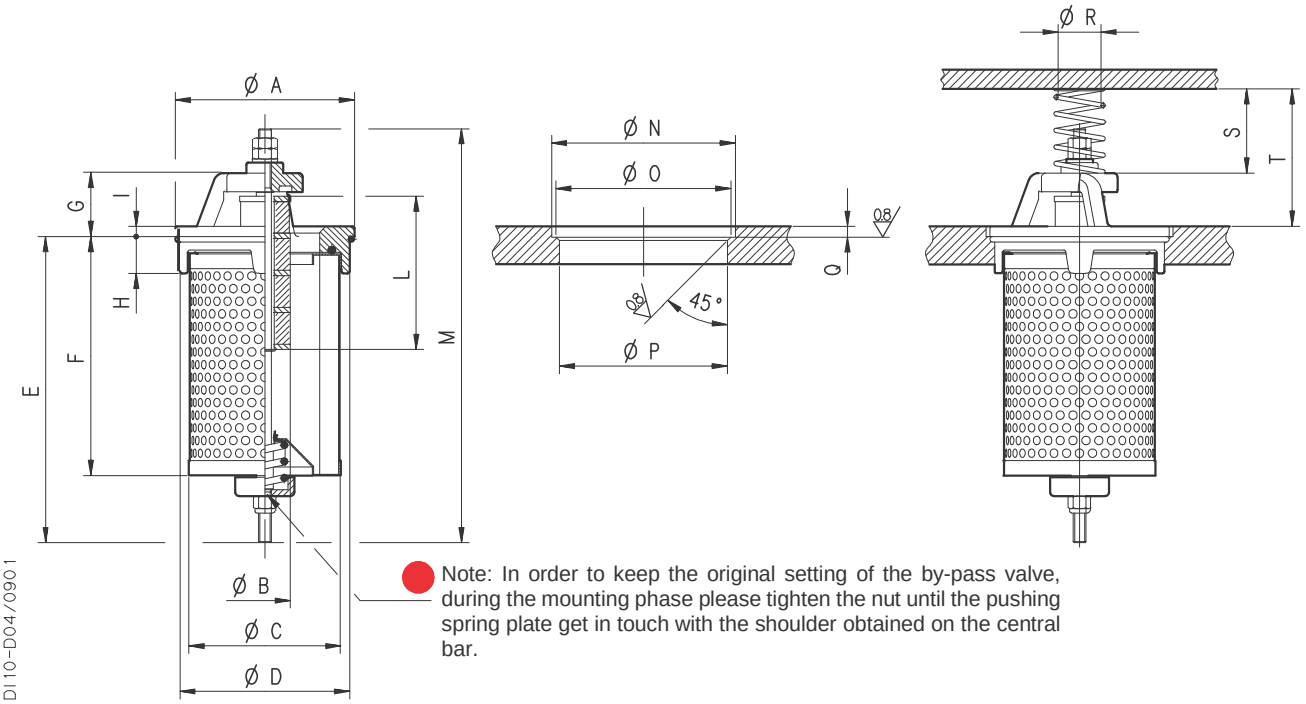

DI10-D04/0901

Note: In order to keep the original setting of the by-pass valve, during the mounting phase please tighten the nut until the pushing spring plate get in touch with the shoulder obtained on the central bar.

Filter type	A	B	C	D	E	F	G	H	I	L	M	Ø N	Ø O	Ø P	Q	Ø R	S	T
	mm	mm	mm	mm	mm	mm	mm	mm	mm	mm	mm	mm	mm	mm	mm	mm	mm	mm
HF 575-20.105	85	23	72	80,5	145	113	30	17,5	4,8	72,5	196	86,5	82,5	81,5	7,5	20	39,5	64,5
HF 575-20.150					190	158					241							
HF 575-20.200					240	208					291							
HF 575-20.300					340	308					391							
HF 575-30.190	118	23	106	111	246	200	40,5	23,5	5,5	107,5	314	119,5	113	112	9	31	45	80
HF 575-30.260					316	270					384							
HF 575-30.465					521	475					589							
HF 575-40.210	150	45	126	138	275	225	57,5	29	7	160	358	151,5	140	139	12,5	31	49	100
HF 575-40.290					355	305					438							
HF 575-40.390					455	405					538							
HF 575-40.480					545	495					628							

Replaces: 02/04.00

Di10-002 - 02/09.01

HOW TO ORDER A COMPLETE FILTER HF 575

1	2	3	4	5	6
HF575-20.105 -	AS -	FG010 -	B17 -	B -	R

1 Filter type	CODE
See table page 6	HF575-...

2 Filtering surface	CODICE
Standard	AS

3 Degree of filtration	CODE
10 m] Micro-fibre glass	FG010
25 [m] Micro-fibre glass	FG025
60 m] Stainless steel mesh	MI060
10 [m] Cellulose	SP010
25 m] Cellulose	SP025

4 By-pass valve	CODE
Setting 80 [kPa]; 0,8 [bar]	B08
Setting 170 [kPa]; 1,7 [bar]	B17

5 Seals	CODE
Buna	B
Viton	V

6 Magnetic set	CODE
With magnetic set	R
None	Z

Standard

On request

Replaces: 02/04.00

Di10-002 - 02/09.01

FILTERING ELEMENTS HF 570 AND HF 575 - TECHNICAL DATA

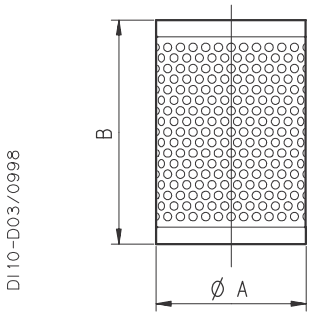

Element type	Ø A	B	Standard filtering surface		
	mm	mm	cm^2		
			FG	SP	MI
HE K08-20.105	72	105	1100	1190	550
HE K08-20.150		150	1590	1720	790
HE K08-20.200		200	2180	2310	1060
HE K08-20.300		300	3210	3480	1600
HE K08-30.190	106	190	3130	3800	1450
HE K08-30.260		260	4320	5240	2000
HE K08-30.465		465	7750	9400	3600
HE K08-40.210	126	210	4200	5690	1980
HE K08-40.290		290	5830	7900	2750
HE K08-40.390		390	7880	10650	3700
HE K08-40.480		480	9710	13140	4570

Replaces: 02/04.00

HOW TO ORDER A REPLACEMENT ELEMENT

1		2		3		4
HEK08-20.105	-	**AS**	-	**FG010**	-	**B**

1	Element type	CODE
See table above		**HEK08-..**
2	**Filtering surface**	**CODE**
Standard		**AS**

3	Degree of filtration	CODE
10	m] Micro-fibre glass	**FG010**
25	[m] Micro-fibre glass	**FG025**
60	m] Stainless steel mesh	**MI060**
10	[m] Cellulose	**SP010**
25	[m] Cellulose	**SP025**

6	Seals	CODE
Buna		**B**
Viton		**V**

Di10-002 - 03/09.01